WELD OSCILLATOR

MODEL : HTW-05-LM

HANGIL INDUSTRY Co.
www.autowelding.com

1. OUTLINE

- It is a weld oscillator operating with slide and there are the following weld effects;
  1) To get weld bead clean and uniformed.
  2) To get weld penetration uniformed.
  3) It is a proper solution to get a good back bead in the thin circle welding, because the bead center is penetrated thin.
  4) To get multi layers effects with once welding.
  5) The weld pool is stable.
  6) Have no undercut and overlap by spreading the arc heat in uniformity to both sides.

1-1. Weaving Parameter Program

1) 4 weaving patterns can be programmed/memorized and call out for repeat welding
   One pattern can be input in the parameters: speed, weaving width, dwell time.
2) The memorized weaving pattern from 0 to 3 the operator wants can be selected with the outside connecting S/W or relay connecting to the other unit or through the remote control box(option), with which the operator can select the other weaving patters for 2nd layer during the welding.

1-2. OSCILLATION pattern select mode (option)

* If the operator does not select the memorized weaving pattern and the power is on, the Oscillator is programmed and set to operate with the memorized 0 pattern under Auto Mode

1) If the operator does select the pattern through the remote control box or outside unit and then position the below toggles S/W to the “RUN”, the Oscillator will work on.

RUN : the Oscillator works
Stop : the oscillating stops

OSCILLATOR RUN - STOP SWITCH

Therefore only one pattern, O, should be used without the remote control box or the outside connecting unit.

1-3. OSCILLATION weaving pattern display

1) The selected weaving pattern No.(0-3) is displayed at the left side during the Run mode.
2) If the weaving parameter is changed, the changed pattern No will be displayed after 20 sec.

2. STANDARD SPECIFICATION

DESCRIPTION	BACK AND FORTH MOTION BY DIGITAL CPU PROGRAM	
MODEL NO.	HTW-05-LM	
OSCILLATION DATA MEMORY	4 MODEL (OPTION)	
SPEED	100 – 1,000MM/MIN, 1 -100% setting unit : 1%	
CENTER POSITION MOVEMENT RANGE	CENTER POSITION IS SET BETWEEN SLIDE STROKE ; 5 – 95MM	
TRAVEL WIDTH	± 0~40MM, setting by unit : 0.1MM	
DWELL TIME	LEFT	0-2.0SEC SETTING BY UNIT 0.1SEC
	CENTER	
	RIGHT	
INPUT POWER	1¢ 220V, 60Hz, 50Hz, 2A	
SLIDE SIZE	312 X 168X62MM(L * W * H)	
SLIDE STROKE	100MM(OPTION 150MM)	
LOADING CAPACITY	5KG	
SLIDE MOMENT	350KG/CM2	
WEIGHT OF SLIDE	6.5KG	
CONTROL BOX SIZE	300 X 200 X 110(L * W * H)	
WEIGHT OF CONTROL	7KG	

3. STRUCTURE PRODUCTS

3-1. STRUCTURE PRODUCTS

1) CONTROL BOX	1SET(POWER CABLE1.5MX1EA)
2) SLIDE	1SET(CONN. CABLE2.0MX1EA)
3) REMOTE CONTROL(OPTION)	1SET(CONN. CABLE1.5MX1EA)

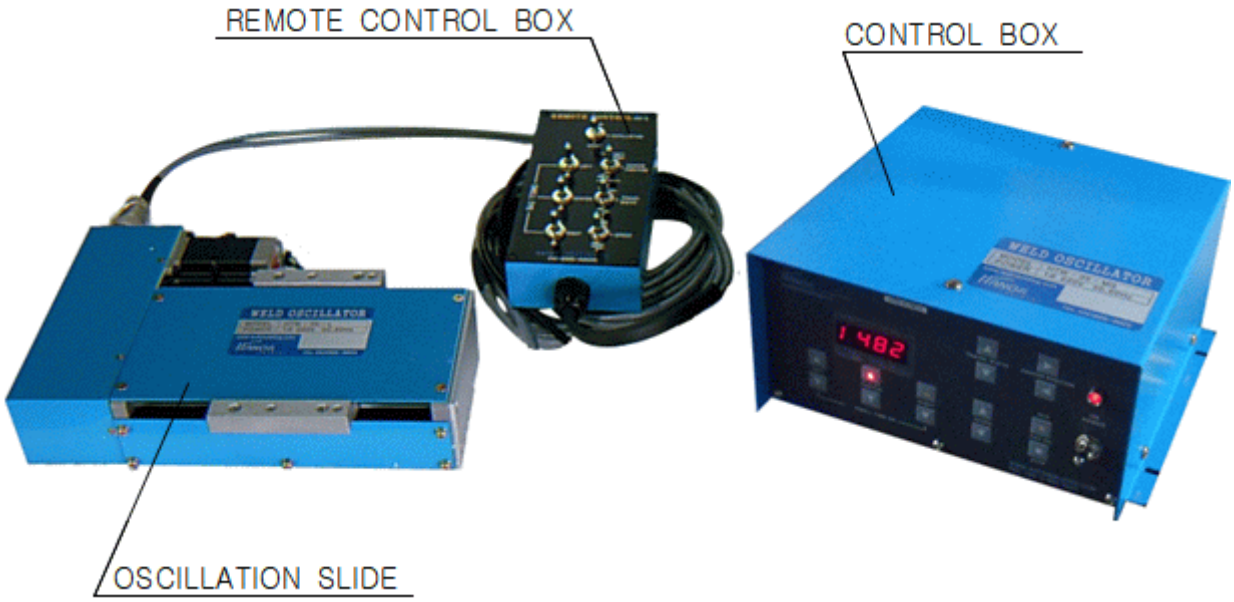

4. EXPLANATION ON PARTS

4-1. CONTROL BOX

- The control box is consisting of CPU sequence and motor control and the connectors are used for easy connection and maintenance of the cable.
- The front panel in the control box has the toggle switches and volume for adjusting the conditions and parameters. Therefore, the user does understand this manual fully before operation.

4-2. OSCILLATOR SLIDE

- The slide is motioned with the motor, having the precise ball screw installed and the frame is made of Al alloys for reducing the weight.

4-3. CONNECTOR

1) CN1 : connector for power supply.
2) CN2 : connector for connection of slide.
3) CN3 : connector for connection of Remote Control box.

4-4. REMOTE CONTROL BOX(OPTION)

- It is required to control the oscillator from outside.

5. EXPLANTION ON FUCNTION SWITCH

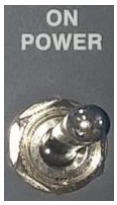

Power Switch

- If the power switch is “ON”, the electricity is supplied.

Lamp for indication of the supply of the electricity.

- The lamp “ON” means the electricity is being supplied to the unit.

Oscillator RUN-STOP Button

- This toggle switch is for RUN or STOP. In the RUN position, the oscillator does work. In the STOP position, the operation does stop and the slide does take the center position.
  If the operator does operate the Oscillator with the Remote Control, the switch should take the
  STOP position.

Center Position Button

- The switch is for moving the location of the torch. When the switch is up, the torch does move to right and when it is down, the torch does to left. At the same time, the program data displayer does show the moved location by number.
- The moved digit shows the unit “mm” and the torch is located 5mm away from the left-end of the slide. If the slide installation is upside down, the torch is located 5mm away from the right-end of the slide. Therefore, the user should take care of the installation by referring the picture in installation, which is coming with chapter.
- The center movement is limited within the slide stroke range. When the user moves the center position, take care not to lean to right or left, because the uneven-stroke may disturb wider oscillation i.e. the oscillation pattern is not made as the program. Therefore we recommend the user that the torch be centered in the slide.
- The range of center movement is from 5.0mm in left side to 95mm in right side, but the actual range is 90mm and the movement unit is 0.1mm.

TRAVEL WIDTH ADJUST

- 4 weaving patterns can be set and memorized.
- The toggle switch is for adjusting the travel width of the torch. If the switch is UP, the travel width is wider, and in the other case the width is shorter. The travel width shows the value on the displayer. The width range is from +/-0 ~ 40mm; the travel range is 0 ~ 80mm set by 0.1mm unit.

SPEED

- 4 weaving patterns can be set and memorized
- The switch can increase the speed up and down. The toggle's UP makes the speed up and if down, the speed goes down. The set speed displays by number. The actual speed is 100 ~ 1,000mm/min. The range is 0~100% set by unit 1 %.

DWELL TIMER : LEFT, CENTER and RIGHT

- It is the switch for setting the time dwelling at left, center and right. The toggle "UP" means " stop longer and "DOWN" means "stay shorter at the right, center or left"
- Setting unit: 0.1sec.
  1000 ~ 1020: LEFT stop time
  2000 ~ 2020: CENTER stop time
  3000 ~ 3020: RIGHT stop time

PROGRAM DATA DISPLAY ON RUN.

The real movement length of torch is displayed when the toggles switch takes the "RUN" position; if the center location is set 50mm and the travel width is set 10mm, displayed is the torch-moved length between 40 ~ 60 according to the motion of the torch. For check-up of the programmed data in Mode, push the Mode switch ON-OFF by turns.

● PROGRAM INPUT AND CORRECTION

- 4 weaving patterns can be set and memorized.

  At first, go to 0-3 and then select one of them with s/W. set and memorize the parameters

- The setting can be done under RUN mod, by using the toggle up or down for parameter setting or its correction.

  The parameters data are displayed when to use the S/W. Check the parameter or patterns you want and then input the parameters in them as you want.

6. FUNCTION LIST

MODE	FUNCTION
1	OSCILLATION SPEED setting;150~1,000mm/min, 0~100% setting by 0.1%
2	LEFT DWELL ON TIME: 1000 ~ 1020sec(set by 0.1sec)
3	RIGHT DWELL ON TIME:3000 ~ 3020sec(set by 0.1sec)
4	CENTER DWELL ON TIME :1000 ~ 1020sec(set by 0.1sec)
5	CENTER position movement;5.0~95mm(set by 0.1mm)
6	TRAVEL WIDTH +/-0 ~ 40mm (set by0.1sec)

7. OSCILLATION PATTERN PROGRAM

- There are 8 patters of oscillation to be applied according to how to use, which can be done with the toggles switch for "DWELL TIME ON".

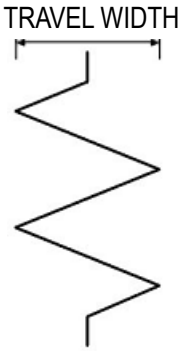

Picture1. This is the pattern to be made under DWELL TIME OFF

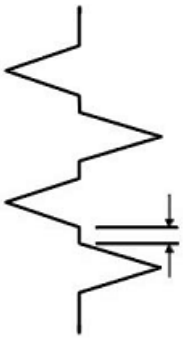

The above gap in the picture is adjusted with CENTE DWELL time.

Picture 2. This pattern is produced under the followings;
Center Dwell Time does set over 0.1 sec.
LEFT, RIGHT is set to be O sec

The above gap is made by adjusting the LEFT DWELL time

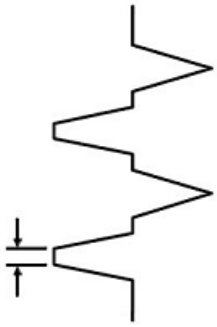

Picture 3. The oscillation patterns is made under the followings;
LEFT, CENTER DWELL time is set over 0.1sec
RIGHT DWELL time is set to be 0sec.

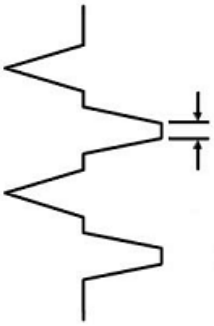

Picture 4. The pattern is produced under the followings;
LEFT DWELL time is set to be 0sec.
CENTER, RIGHT DWELL time is set over 0.1sec.

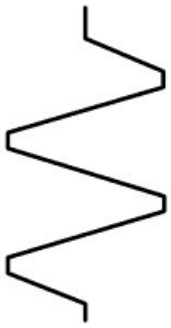

Picture 5. This oscillation is made under the followings;
LEFT, RIGHT DWELL time is set over 0.1sec.
CENTER DWELL time is set to be 0sec.

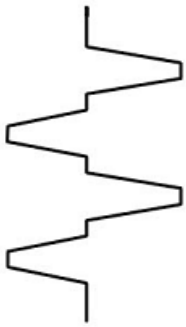

Picture 6 The pattern is made under the followings ;
LEFT, CENTER, RIGHT DWELL time is set over 0.1sec.

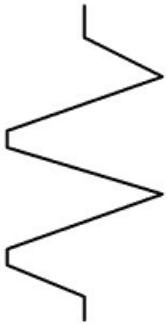

Picture 7 The pattern is done under the followings;
LEFT DWELL time is set over0.1sec.
CENTER, RIGHT DWELL time is set to be 0sec.

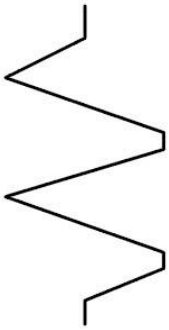

Picture 8 The pattern is under the followings
RIGHT DWELL time is set over 0.1sec.
CENTER DWELL time is set to be 0sec

8. OSCILLATION INSTALLATION

- Make the installation of the oscillator by referring the following picture.

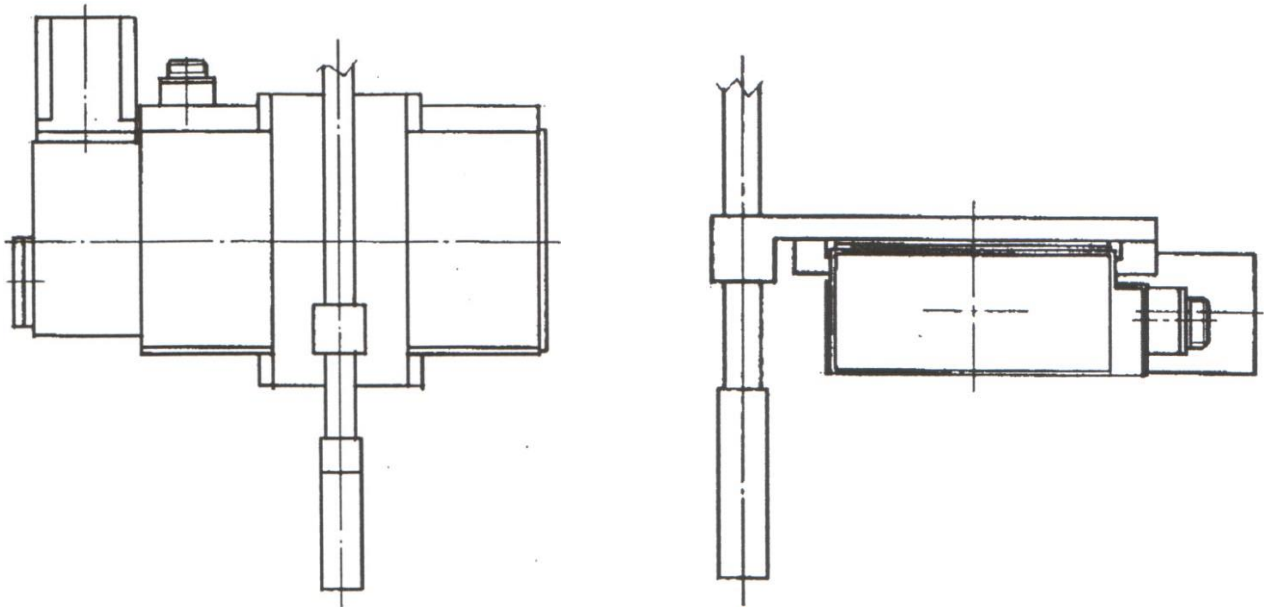

Picture 1 Normal Installation

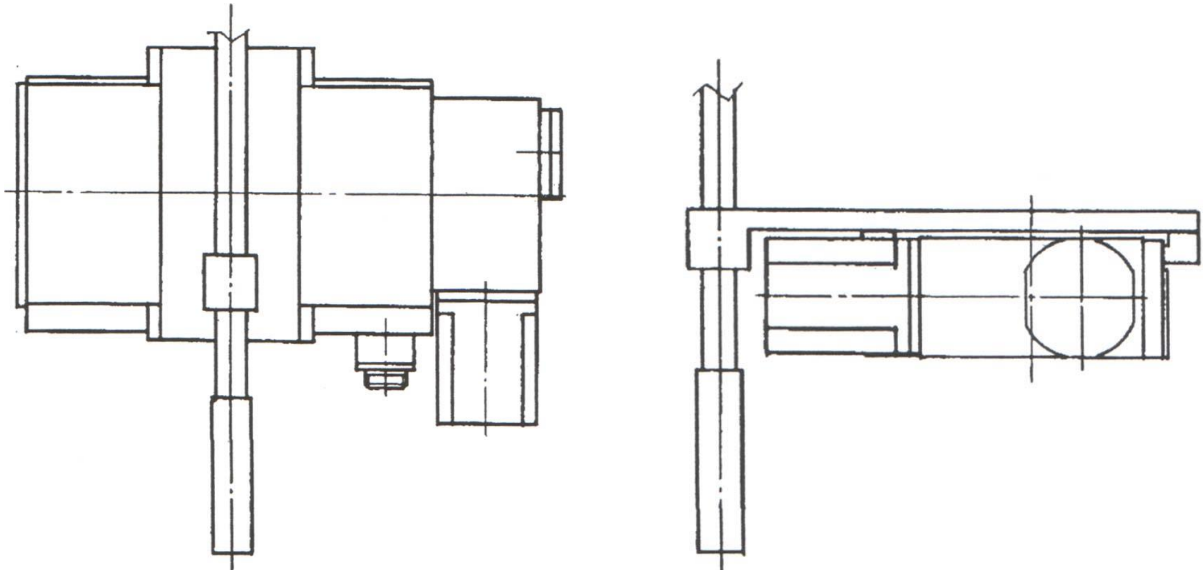

Picture 2 Abnormal Installation

- If the slide is installed left-side right, the switch function as well as the displayed value is also changed on the contrary.

9. OPERATION

- After the oscillator slide is installed, check out the cable connection once again.

9-1. Operation

1) Power switch is ON and the lamp is lit.
2) Run switch is “ON” and the unit starts operating.
3) The center of the torch moves as the user wants by adjusting the toggle switch.
4) Travel width is adjusted by using the toggle switch.
5) Dwell time adjusting of RIGHT, LEFT and CENTER
6) The program is input and welding machine is ON.
7) Finish the welding. The RUN switch doe toggle to STOP position. At this time, when the torch stop at the center, the power switch should be OFF.

9-2. Weaving Parameter Program

1) 4 weaving patterns can be programmed/memorized and call out for repeat welding
One pattern can be input in the parameters: speed, weaving width, dwell time.
2) The memorized weaving pattern from 0 to 3 the operator wants can be selected with the outside connecting S/W or relay connecting to the other unit or through the remote control box(option), with which the operator can select the other weaving patters for 2nd layer during the welding.

9-3. OSCILLATION pattern select mode (option)

* If the operator does not select the memorized weaving pattern and the power is on, the Oscillator is programmed and set to operate with the memorized 0 pattern under Auto Mode
1) If the operator does select the pattern through the remote control box or outside unit and then position the below toggles S/W to the “RUN”, the Oscillator will work on.

RUN : the Oscillator works
Stop : the oscillating stops

OSCILLATOR RUN - STOP SWITCH

Therefore only one pattern, O, should be used without the remote control box or the outside connecting unit.

9-4. OSCILLATION weaving pattern display

1) The selected weaving pattern No.(0-3) is displayed at the left side during the Run mode.
2) If the weaving parameter is changed, the changed pattern No will be displayed after 20 sec.

10. OUTLINE

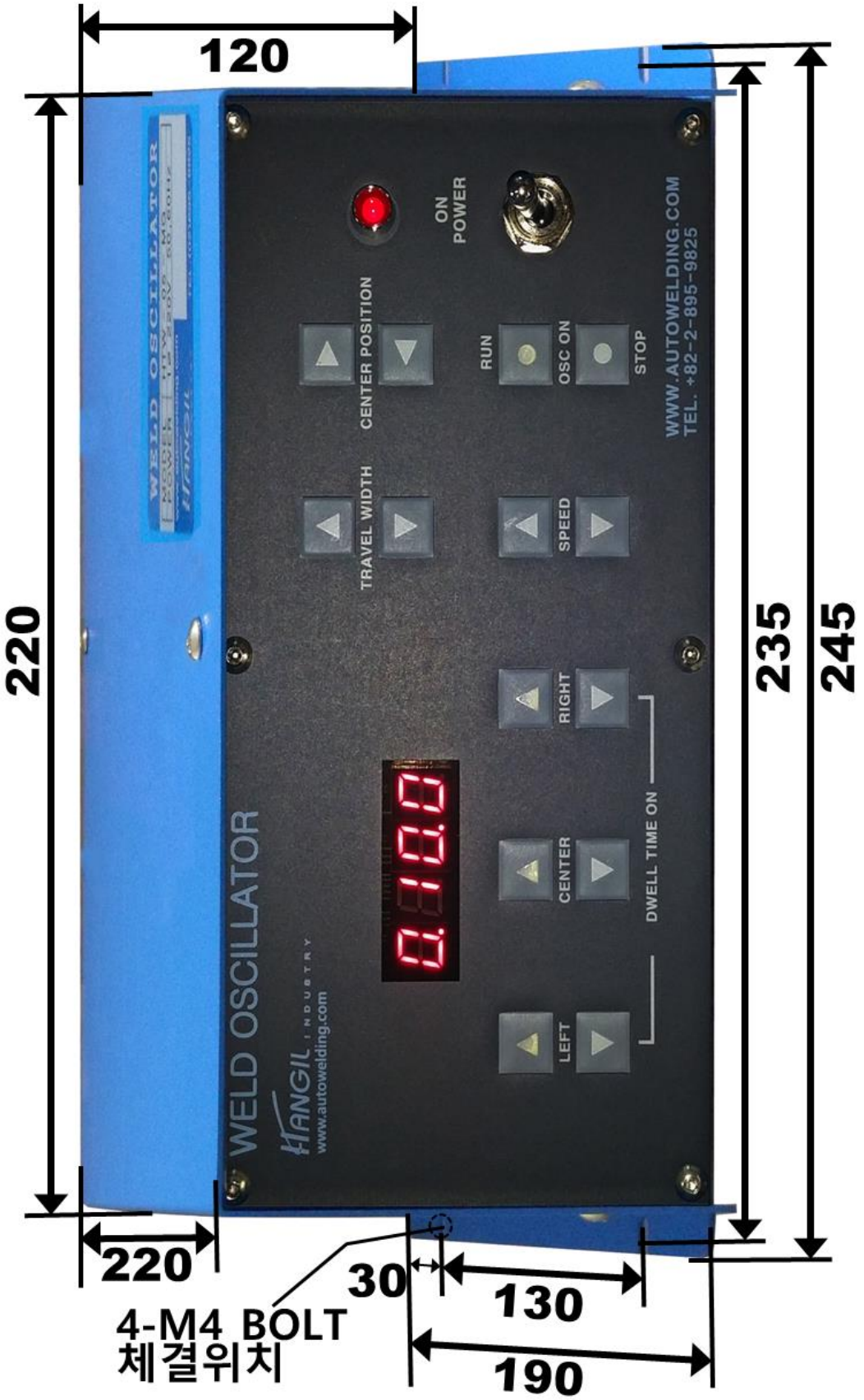
120
220
235
245
220
30
130
190
4-M4 BOLT
체결위치
WELD OSCILLATOR
HANGIL INDUSTRY
www.autowelding.com
ON POWER
CENTER POSITION
TRAVEL WIDTH
RUN
OSC ON
STOP
SPEED
RIGHT
CENTER
LEFT
DWELL TIME ON
WWW.AUTOWELDING.COM
TEL. +82-2-895-9825

REMOTE CONTROL CONNECTOR 결선도

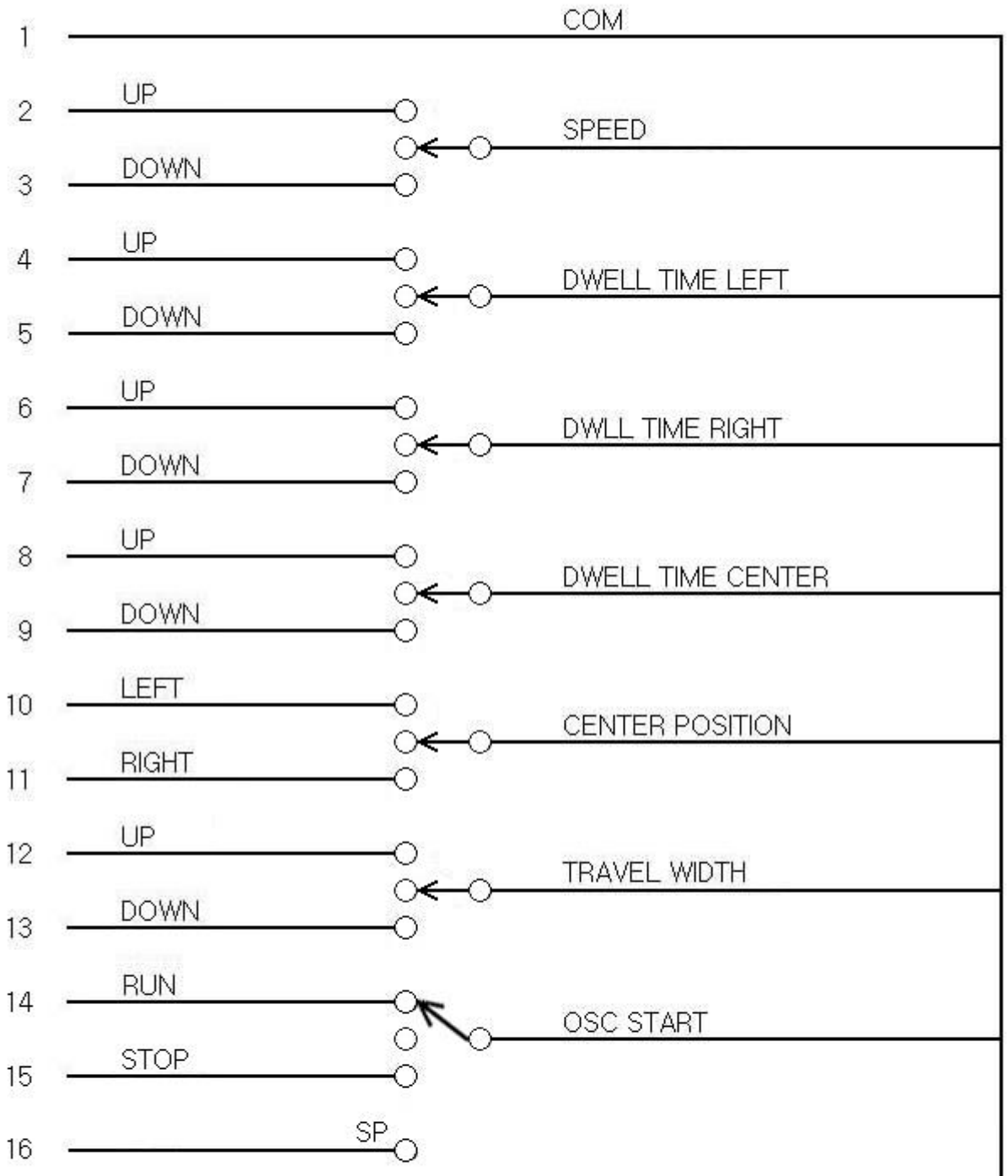

作成日字			도 명 HTW-05-L REMOTE 결선도		
검도	설계	제도	한길産業	도번	
				척도	매수

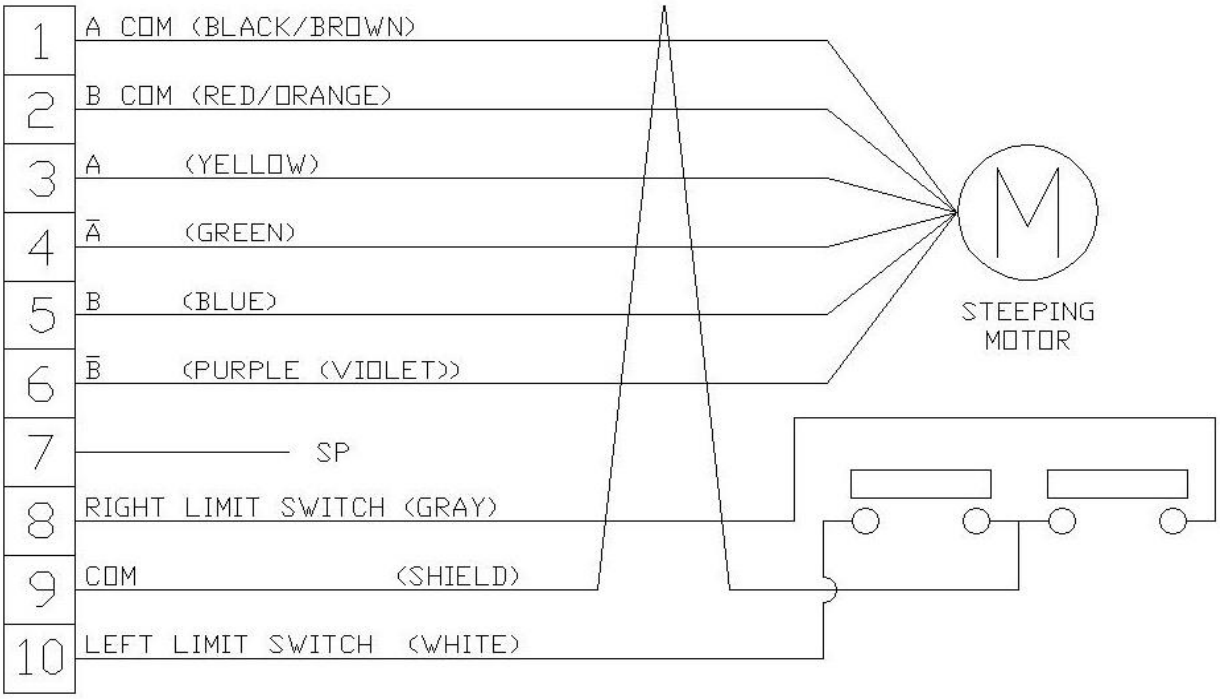

MAKER	ORIENTAL	JAPAN SERVO	SANYO DENKI
A COM	YELLOW	RED	BLACK
B COM	WHITE	BLUE	WHITE
A	BLACK	BLACK	RED
Ā	GREEN	BROWN	YELLOW
B	RED	YELLOW	BLUE
B̄	BLUE	ORANGE	ORANGE

⚠1								
⚠2								
訂符	年月日	記 事	製圖	品番	品 名	材 質	數量	備 考

作成日字 年 月 日			圖名 OSC(HTW-05-L-NEW) MOTOR CONNECTOR		
檢圖	設計	製圖	한길산업	圖番	
				尺度 1/	枚數 /

MEMORY CONNECTOR

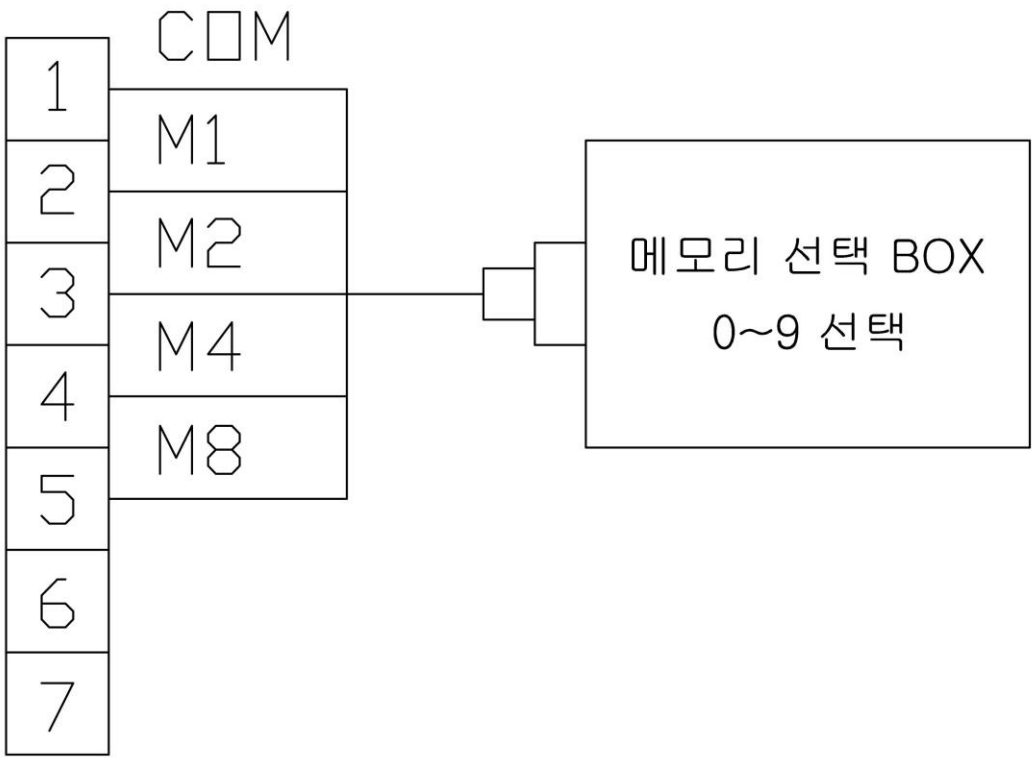

①								
②								
訂符	年月日	記 事	製圖	品番	品 名	材 質	數量	備 考
作成日字 年 月 日			圖名					
檢圖	設計	製圖	한길산업			圖番		
						尺度 1/	枚數 /	

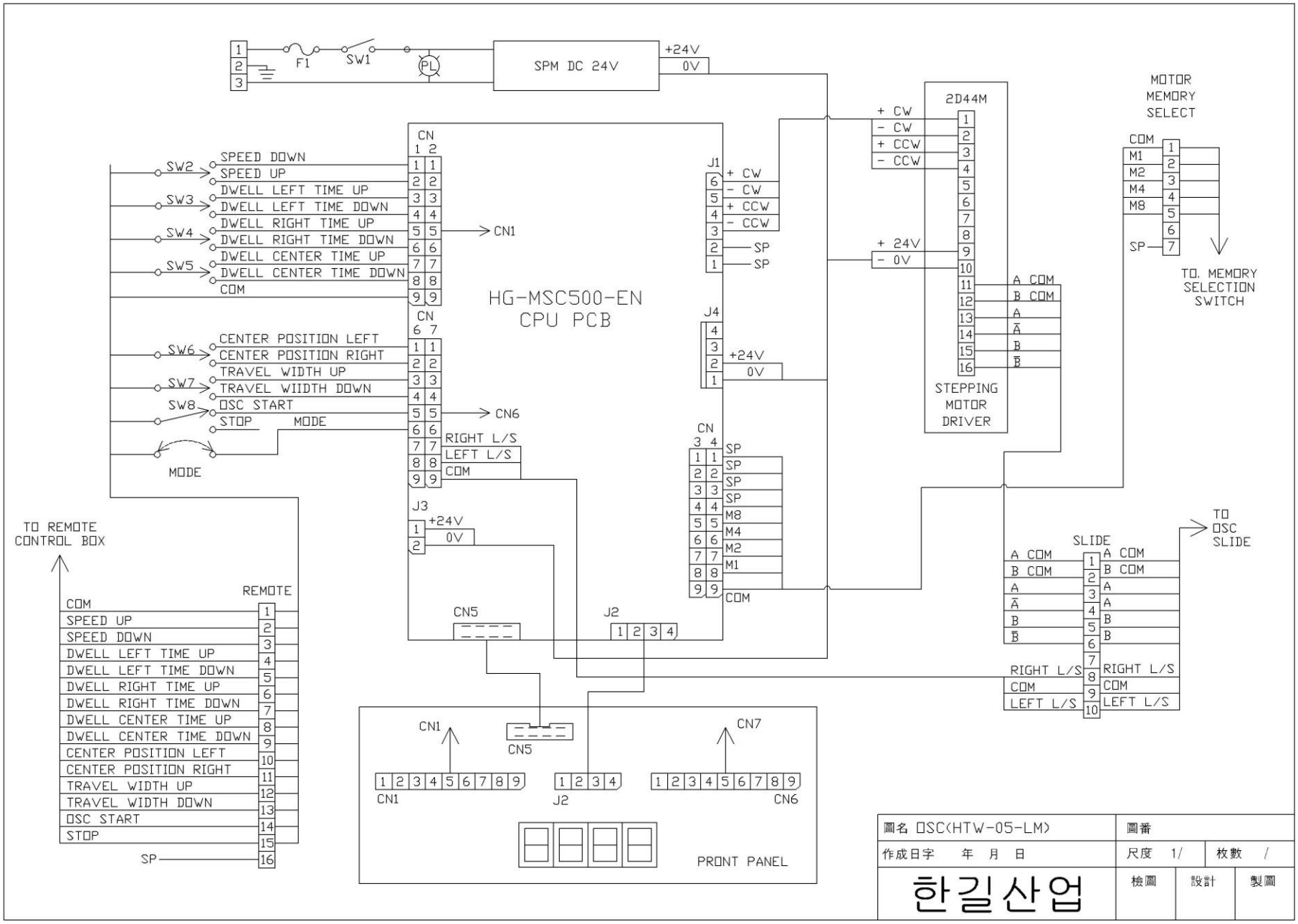
F1
SW1
PL
SPM DC 24V
+24V
0V
HG-MSC500-EN
CPU PCB
SPEED DOWN
SPEED UP
DWELL LEFT TIME UP
DWELL LEFT TIME DOWN
DWELL RIGHT TIME UP
DWELL RIGHT TIME DOWN
DWELL CENTER TIME UP
DWELL CENTER TIME DOWN
COM
CENTER POSITION LEFT
CENTER POSITION RIGHT
TRAVEL WIDTH UP
TRAVEL WIIDTH DOWN
OSC START
STOP
MODE
RIGHT L/S
LEFT L/S
+ CW
- CW
+ CCW
- CCW
SP
M8
M4
M2
M1
2D44M
STEPPING MOTOR DRIVER
A COM
B COM
A
Ā
B
B̄
MOTOR MEMORY SELECT
M1
M2
M4
M8
TO MEMORY SELECTION SWITCH
TO OSC SLIDE
SLIDE
TO REMOTE CONTROL BOX
REMOTE
CN1
CN5
CN6
CN7
J1
J2
J3
J4
PRONT PANEL
圖名 OSC(HTW-05-LM)
圖番
作成日字 年 月 日
尺度 1/
枚數 /
한길산업
檢圖
設計
製圖

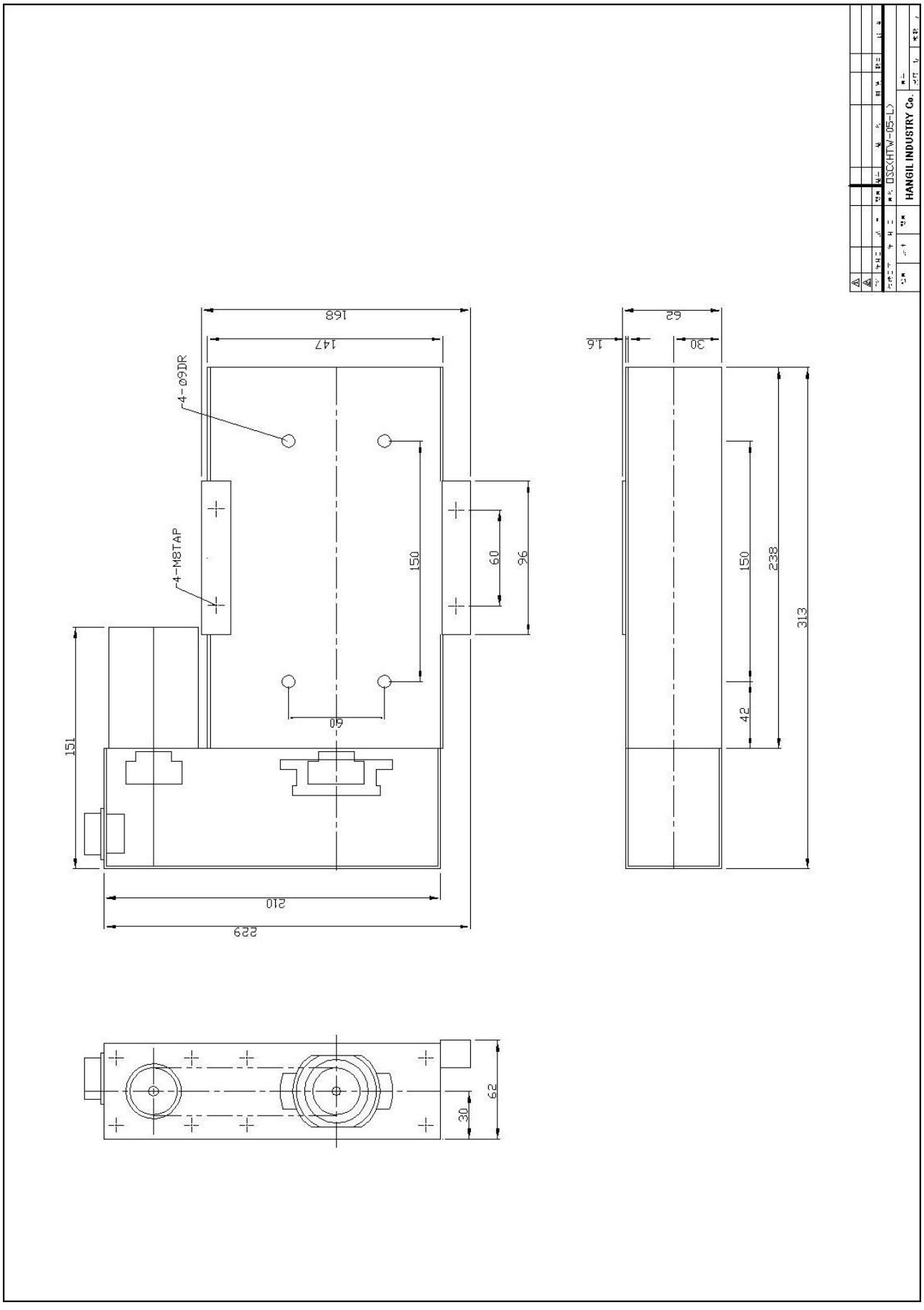
HANGIL INDUSTRY Co.
168
147
4-09DR
4-M8TAP
150
60
96
151
60
210
229
62
1.6
30
150
238
313
42
62
30

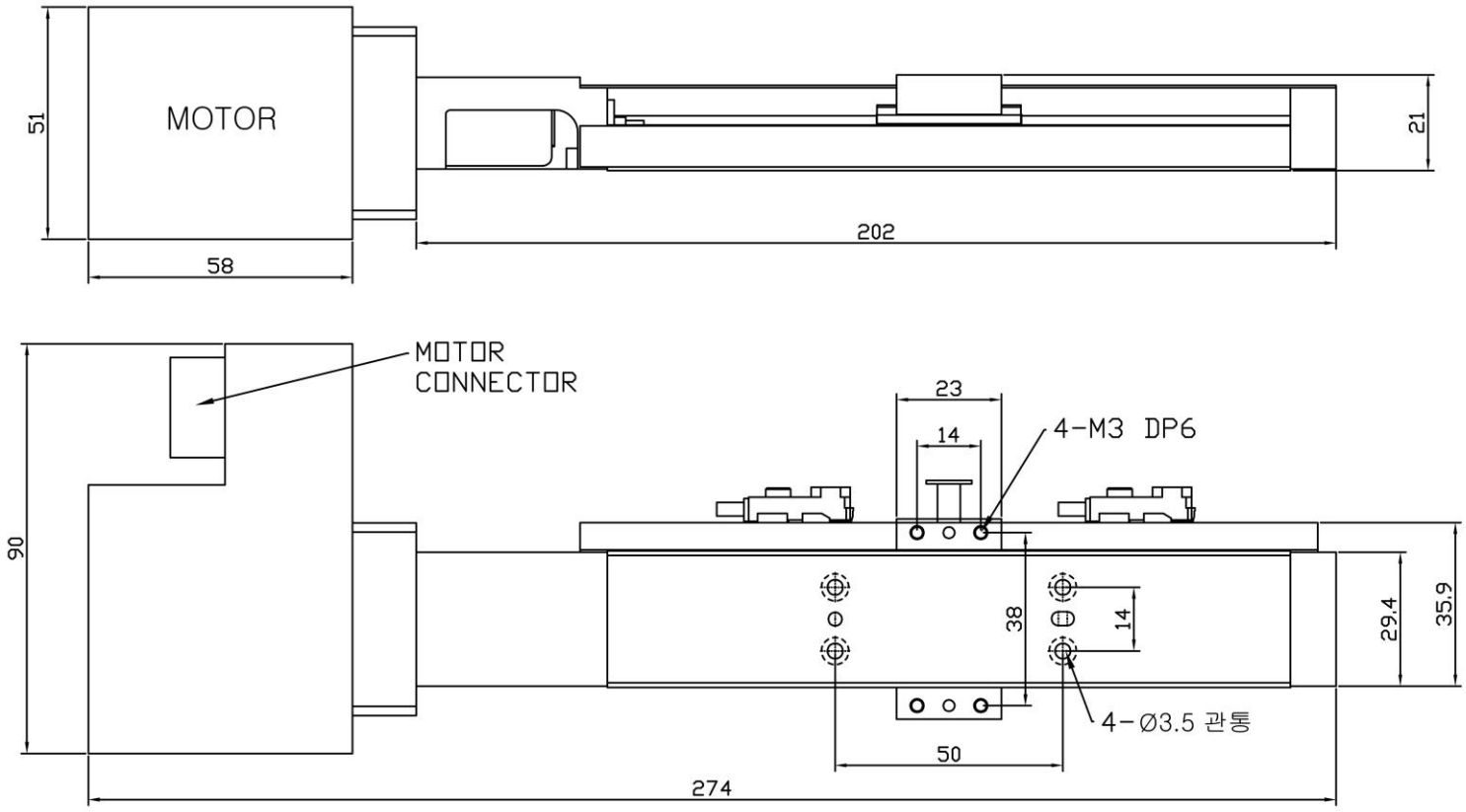

⚠1								
⚠2								
訂符	年月日	記 事	製圖	品番	品 名	材 質	數量	備 考
作成日字 年 月 日			圖名 SLIDE STROKE 100mm (HS-15-100)					
檢圖	設計	製圖	한길산업			圖番		
						尺度 1/	枚數 /	

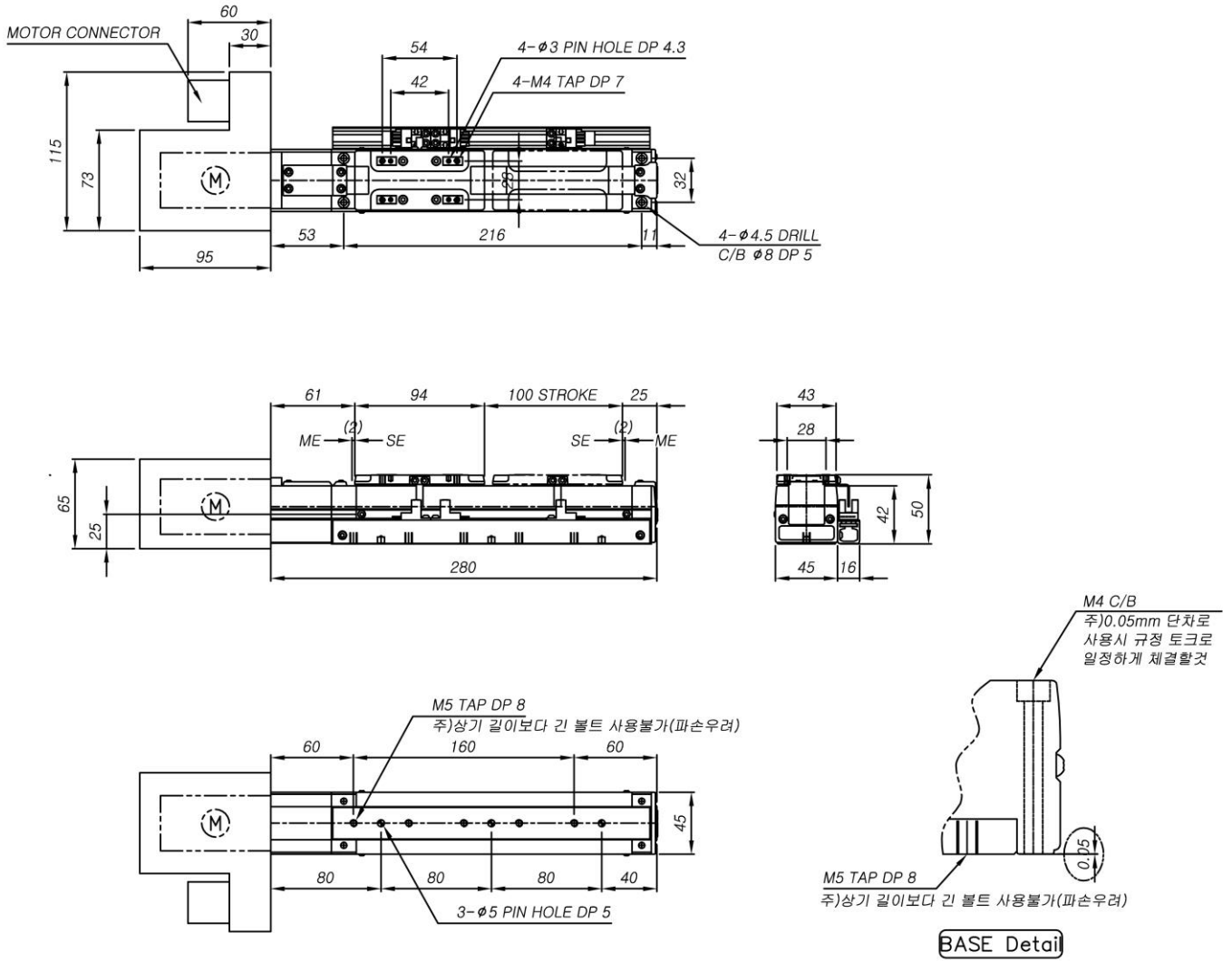
MOTOR CONNECTOR
60
30
54
42
4-ø3 PIN HOLE DP 4.3
4-M4 TAP DP 7
115
73
32
53
216
11
95
4-ø4.5 DRILL
C/B ø8 DP 5
61
94
100 STROKE
25
(2)
ME
SE
SE
(2)
ME
65
25
280
43
28
42
50
45
16
M4 C/B
주)0.05mm 단차로
사용시 규정 토크로
일정하게 체결할것
M5 TAP DP 8
주)상기 길이보다 긴 볼트 사용불가(파손우려)
60
160
60
45
80
80
80
40
3-ø5 PIN HOLE DP 5
0.05
M5 TAP DP 8
주)상기 길이보다 긴 볼트 사용불가(파손우려)
BASE Detail
SLIDE STROCK 100mm (HS-45-100)
한길산업

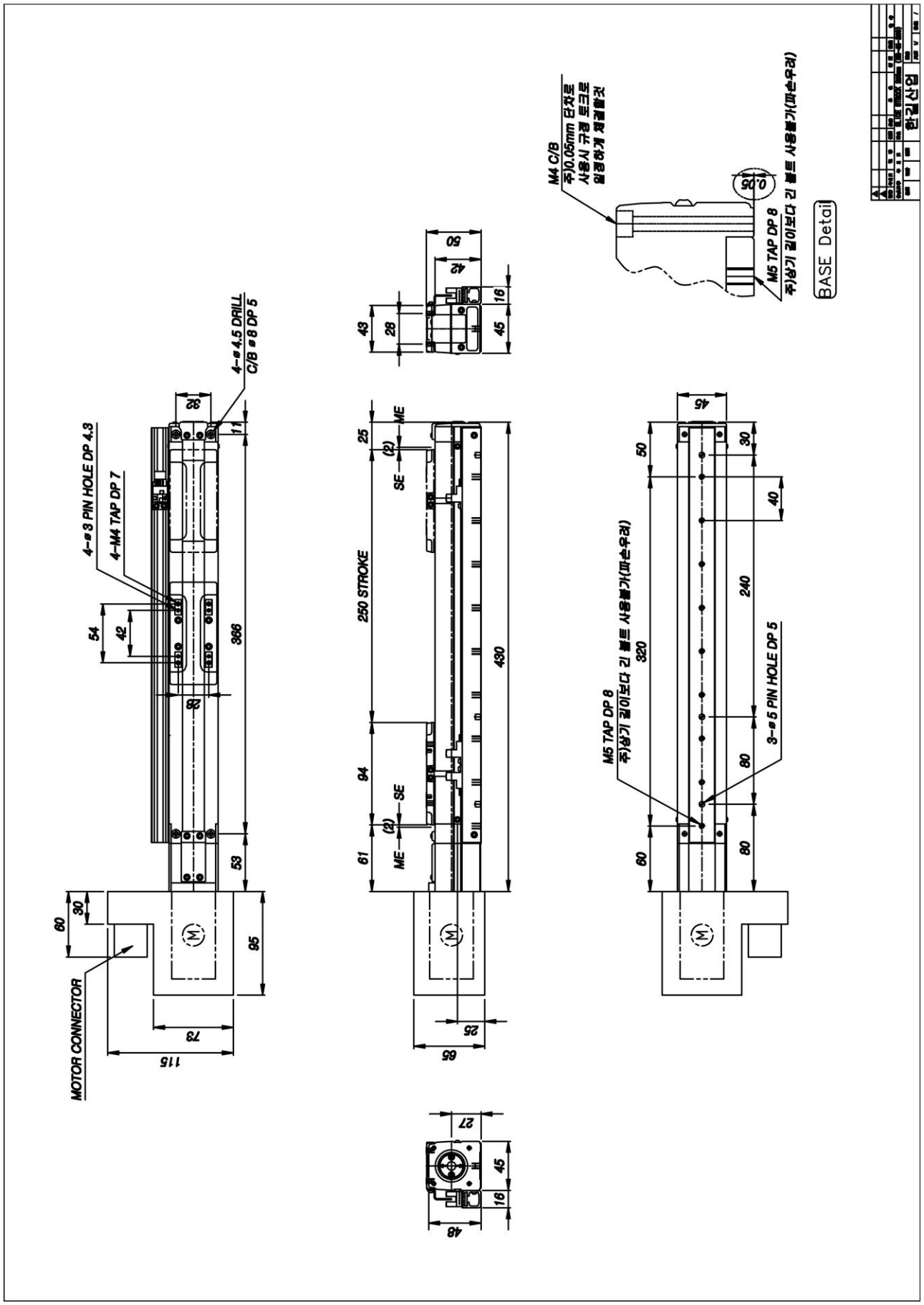
4-ø4.5 DRILL
C/B ø8 DP 5
4-ø3 PIN HOLE DP 4.3
4-M4 TAP DP 7
MOTOR CONNECTOR
250 STROKE
M4 C/B
주)0.05mm 단차로
사용시 규정 토크로
일정하게 체결할것
M5 TAP DP 8
주)상기 길이보다 긴 볼트 사용불가(따온우려)
3-ø5 PIN HOLE DP 5
BASE Detail
한길산업

HANGIL INDUSTRY

575-20, Gwangmyeong 7-dong, Gwangmyeong-si, Gyeonggi-do, Korea

T E L : **82-2-895-9825**

F A X : **82-2-894-6771**

H - Page : **www.autowelding.com**

E -Mail : **autowelding @ autowelding.com**