ARC HEIGHT CONTROL
(ARC VOLTAGE CONTROL)

MODEL : AHC-01-A-1M

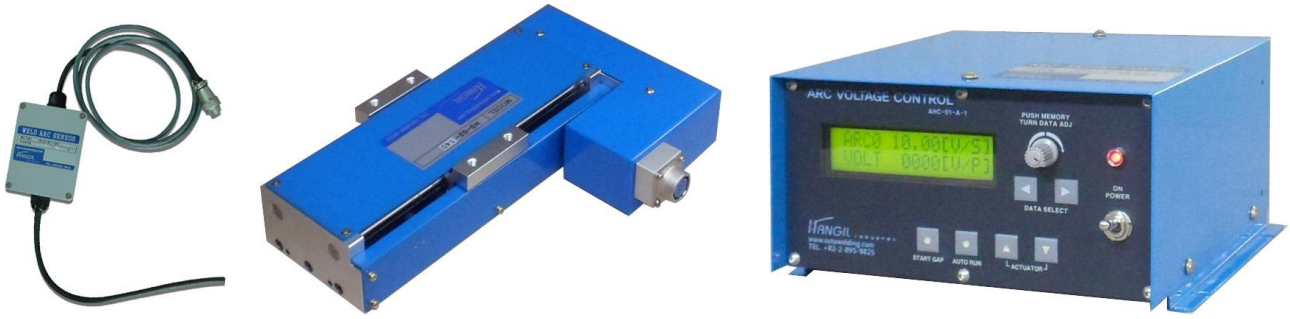

HANGIL INDUSTRY Co.
www.autowelding.com

1. INTRODUCTION

1-1 Figures

- It is a kind of unit to keep up the arc in a distance between work-piece and torch by controlling the voltage of arc; if the voltage difference occurs between the setting value in the control and the real voltage from the torch, the slide does move up and down to keep up the distance or gap between the torch and work-piece.
- When the welding is in the process, the voltage gets changed according to the distance between the torch and work-piece. Therefore, the slide does work on not to be out of the set point.
- The unit is compatible to the other system for automation by using the connectors.

1-2 Function Explanation

1) The LCD and full digital control are applied for easy control and handling.
2) There are the applicable process; GTAW(TIG), PAW(PLASMA), PACT(PLASMA cutting).
3) In case of GTAW(TIG), the tungsten electrode does touch the work-piece and then the torch automatically moves up. So, the start position setting is easy.
4) For the interface to the other utilities, there is the connector on the unit. On the top of that, the user can apply to some other conditions by changing the parameters.

★ Function easy to use

In the Auto mode or manual mode, when the arc height is not suitable for the welding, the height can be adjusted with the following manual s/w and in addition the welding parameters or conditions can be also newly programed or set.

	ACTUATOR - The slider mounted with the torch can be moved up and down with the actuator button. - During the operating or welding, the torch can be adjusted up or down with the button. At the moment when the button is off, the Arc Voltage supplied at the height of the torch is automatically saved as standard voltage.

1-3 Pre-condition.

- As follows are the check-points before the user applies the unit;

1) The power voltage is not fluctuated too much.
2) There should be almost no contact resistance inside/outside the welding machine.
3) There should be almost no contact resistance according to the temperature rising in the inside of the welder and the contact resistance of cables connecting to torch or work-piece. (please check the worn-out of the parts or if the cable length is changed)
4) Make sure the sensor is correctly connected to the power source.
   (The power source for GTAW may be not connected to the sensor according to the manufacturer of the power source)
5) It is important to keep the welding travel speed even.
   If the travel speed is not even, the same Arc voltage make the height of the torch not even.
   For example, the welding conditions is as follows : the Arc voltage 15V, travel speed 500mm/min, 5mm height of the torch. If the welding speed is slow, the arc voltage and the height of the torch go up. On the contrary, the fast travel makes the arc voltage low and the torch down.

1-4 INSTALLATION

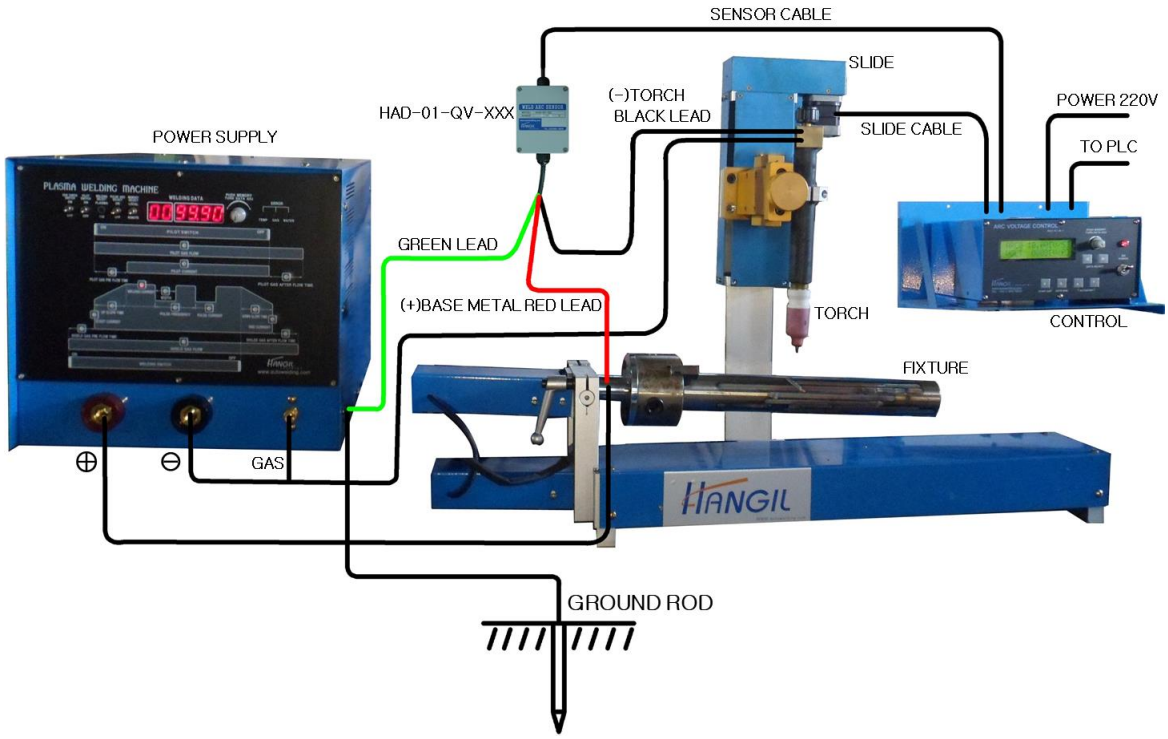

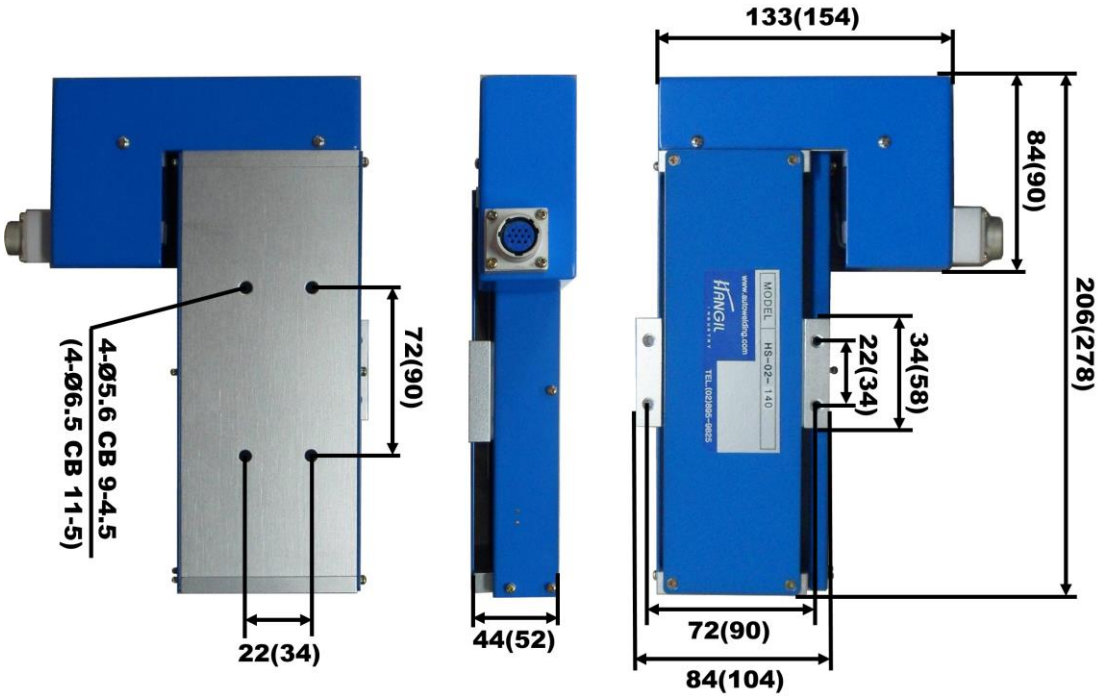

( ) SIZE = SLIDE MODEL HS-02-140

2. STANDARD SPECIFICATION

DESCRIPTION	AHC-01-A-1M
APPLICATION	GTAW, PAW, PACT (DC)
CONTROL	Welding Parameter Programmable : 10models(0,1,2,4,8)
1) Process	GTAW, PAW, PACT (Only DC ARC WELDING) But, the pulse welding is available when there is the pulse-synchronous signal
2) Standard voltage range Selection	• AVG : the current ARC voltage is automatically memorized. • AUTO : the welding voltage com be input in the number. • ANL : the voltage can be set from external equipment.
3) Voltage-setting range	• GTAW, PAW : 5 ~50V • PACT : 50 ~ 500V
4) Standard deviation setting range	• GTAW, PAW : 0.1 ~ 2.55V • PACT : 0.5 ~ 25 V
5) STICK OUT length setting range	0.1 ~ 10mm
6) START DELAY TIME	0.0 ~ 9.9sec.
7) Standard voltage : auto memory time	0.0 ~ 9.9sec.
8) Output Delay Time	0.0 ~ 1.0sec
9) Pull up range setting	0.0 ~ 50mm
10) Up/down speed	0.1 ~ 99%
MOTORIZED SLIDE	• GTAW, PAW • HS-01-100 (HS-02-140) Loading capacity : 5(10)kg Stroke : 100(140)mm Moment : 70(180)kg-cm Speed : 100(150)mm/min. Motor : stepping motor Pact : option and on request.
SENSOR (AVC)	• GTAW, PAW : HAD-01-QV-50 • PACT : HAD-01-QV-500
CABLE FOR CONNECTING	AHC-CABLE-03
POWER CABLE	1Ø, 220V, 50/60Hz, 2A

3. COMPONENTS

3-1 COMPONENT UNIT

1) CONTROL BOX 1SET
2) UP/DOWN SLIDE 1SET
3) SENSOR (AVC) 1SET
4) CONNETING CABLE 1SET(POWER, SLIDE, SENSOR)

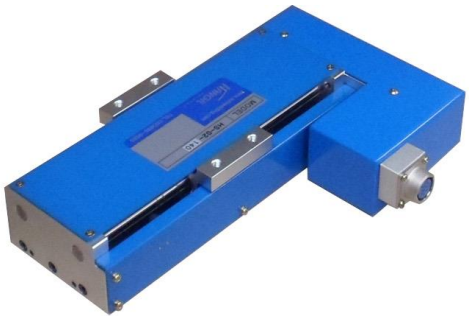

4. EXPLANATION ON UNIT

4-1 Control Unit

- During the welding, the sensor does check the change of arc voltage and does compare the setting voltage with the change range. The slide on which the torch is mounted does move up/down so that the established arc voltage can meet with the welding arc voltage.
- This control can memorize various parameters to require the operation.
- Welding Parameter programmable : max 5 models.

4-2 Motorized Slide

- The frame is made of Al and for the precision of the slide, ball screw is used and the limit S/W is attached to the stroke ends.

4-3 Voltage Sensor

1) The ARC voltage sensor can perceive the change of the welding ARC voltage. We use HAD-01-QV as a sensor.
   (The end-user shall discuss the specification of GTAW welding machine, its type and its brand with Hangil engineer)
2) Plasma Arc Cutting(PACT) shall use the sensor for HAD-01-QV-PACT only.

5. EXPLANATION ON Function Switch

Power S/W

- The switch is for supply of the power to the control unit.

ACTUATOR

- The slider mounted with the torch can be moved up and down with the button.
- During the operating or welding, the torch can be adjusted up or down with the actuator button. At the moment when the button is off, the Arc Voltage supplied at the height of the torch is automatically saved and memorized as standard voltage.

START GAP

- When the button s/w is ON, the Slider moves down at first and then the tungsten touch the workpiece, and stop at the setting value: STICK OUT in SCREEN 5. Stand by AUTO RUN or BUTTON ON
- If STICK OUT is finished, the RELAY 1 is ON. It can be connected to the other Automatic Sys

AUTO RUN

- This function can work regardless of START GAP.
- The function does work as per setting parameters (0-9).
- When the button S/W is on, the distance keeps between the torch and workpiece by moving the slider up or down according to the setting voltage and real voltage (the welding Arc voltage keeps during the operation). At this time, if Relay is on and then the S/W is off, off.
- RELAY2 can be used for connector of welder for automation: on or off

<table>
<tr><td>
</td><td>DATA ADJUST and MEMORY S/W
(TURN DATA ADJUST / PUSH MEMORY)
- This rotary encoder(PMTDA) is for setting and saving of the parameters.
The clockwise is rotated increase and ccw decrease.
- Push one time to save when the settings are finished
- The setting value(data) is saved by pushing one time and then the Cursor disappear!</td></tr>
<tr><td>
</td><td>LCD DATA SCREEN Change button
- It is the button of change of SCREEN.
- When the button is push ON, the SCREEN is changed.</td></tr>
<tr><td colspan="2">● Other Connectors
- There are connectors in the right of control for external equipment.</td></tr>
<tr><td> </td><td>1) MC OUT Connector
- It is for connector to other system or for interface.
- It has RELAY 1,2 contact point.
- The external equipment or system can read and use the setting welding parameters.
- The output the welding voltage is 0~5V
(when it set 50V, the output 5V)
- For the details, please refer to the drawing herein.</td></tr>
<tr><td> </td><td>2) MEMORY
- It is a connector to select the memorized data from external equipment.
- The Memory 0-9(welding model) can be selected, be made in combination of 1.2.4.8.</td></tr>
<tr><td> </td><td>3) SENSOR Connector
- It is the connector to ARC VOLTAGE SENSOR</td></tr>
<tr><td> </td><td>4) REMOTE Connector
- It is the Remote for control, auto run, manual slider moving up/down.</td></tr>
<tr><td> </td><td>5) SLIDE Connector for UP/DOWN</td></tr>
</table>

● LCD SCREEN DEISPLAY

- It is the display Screen to input the setting value(or data) or correct the established data.

SCREEN 4.

It is a initial screen, indicating the Arc standard voltage and Arc voltage meter as follows;

```
1 > A V E   O P - M O D E
2 > A U T O   3 > A N L   [ 1 ]
```

- It is display screen to set the standard voltage or operating mode.
- If [1] is selected, the screen 1 is displayed in the Screen1-1
- If [2] is selected, the screen 2 is displayed in the Screen1-1
- If [3] is selected, the screen 3 is displayed in the Screen1-1
- The operator rotates the PUSH MEMORY TURN DATA ADJ for adjusting the data(value) and then push it one time for memory setting.
- The Cursor will disappear when to push for memory setting.

SCREEN 1-1. Initial Screen 1(Arc Voltage AVE selection Mode)

It is the screen for welding standard setting and welding Arc voltage meter.

```
A R C +   ? ? . ? ? [ V / S ]
V O L T     0 . 0 0 [ V / P ]
```

- From 1>AVE 2>AUTO 3>ANL in the screen 4
  If 1>AVE is selected, it is displayed like the screen 1.
- During welding, the screen is displayed below.
- The following screen is displayed when welding arc voltage is 10.00V.

```
A R C +   1 0 . 0 0 [ V / S ]
V O L T   1 0 . 0 0 [ V / P ]
```

- From 1>AVE > 2>AUTO 3>ANL in the screen 4
  If 1>AVA, or 3>ANL is selected, the memorized (or saved) data cannot be used.
- The set or memorized standard voltage cannot be changed.
- If the operator wants to change it, at first AUTO RUN S/W is off AUOT RUN(

) and then the Slider mounted with the torch moves up and down with manual 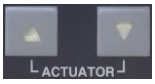

. Again, do AUTO RUN S/W ON. If so, the present arc voltage is automatically saved or memorized as standard voltage.
- In the other way, during the welding or operating (AUTO RUN S/W ON), the operator can change the standard voltage, by pushing up or down the button of ACTUATOR and then OFF its S/W, then the Arc voltage at the moment of OFF is automatically set or memorized as standard voltage.

SCREEN 1-2. Initial Screen 1(Arc Voltage Auto Mode selection)

It is the screen for welding standard setting.
memory check and Arc voltage meter

```
A R C 0   1 0 . 0 0 [ V / S ]
V O L T     0 . 0 0 [ V / P ]
```

- From 1>AVE 2>AUTO 3>ANL in the Screen 4
  If 2>AUTO is selected, it is displayed like SCREEN 1-2.
- ARC "0" in the screen displays about the welding parameter (or data) memory select. The data Memory(storage) is selected from 0-9.
- It is displayed below during the welding.
- The following setting value[V/S] is 10.00V and the Arc Voltage[V/S] is being displayed during the present welding.

```
A R C 0   1 0 . 0 0 [ V / S ]
V O L T   1 0 . 0 0 [ V / P ]
```

- If the present welding Arc voltage is changed, push on the Rotary Encoder PUSH MEMORY TURN DATA ADJ S/W(

) and then rotate the nob to right or left for the new value or push on the ACTUATOR S/W(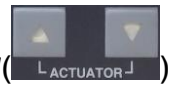

) for change.

SCREEN 1-3. Initial Screen 1(Arc Voltage ANL selection Mode)

It is the screen for welding standard setting and Arc voltage meter

```
A R C -   1 0 . 0 0 [ V / S ]
V O L T     0 . 0 0 [ V / P ]
```

- From 1>AVE >AUTO 3>ANL in the Screen 4,
  If 3>ANL is selected, it is displayed like Screen1-3.
- 10.00[V/S] is displayed as Arc standard voltage which is set by external equipment

```
A R C -   1 0 . 0 0 [ V / S ]
V O L T   1 0 . 0 0 [ V / P ]
```

- 10.00[V/P] is displayed as the real voltage input during the welding.
- The value in [V/P] can be used as Arc voltage meter
- From 1>AVE OP-MODE 2>AUTO 3>ANL in screen 4,
  If 3>ANL is selected, the memory data cannot be used.
- During the welding, if the welding parameters shall be changed, the analogy set point or value shall be changed from external equipment.

SCREEN2 : Standard volt setting and its variation setting (IMPORTANT)

SCREEN 2-1 GTAW

```
  [ G T A W ]    M E M : 0
A V = 1 0 . 0 0 G A P = 0 . 0 5
```

SCREEN 2-2 PAW

```
  [ P A W ]      M E M : 0
A V = 1 0 . 0 0 G A P = 0 . 0 5
```

SCREEN 2-3 PACT

```
  [ P A C T ]    M E M : 0
A V = 1 5 0 . 0 G A P = 1 . 0
```

- cording to the welding process, it is the screen to use the standard voltage setting, deviation range settings and memory function.
- Memory 0-9 welding models can be saved.
- If 1) GTAW 2) PAW 3) PACT TYPE=[ ] is selected, SCREEN 2-1, 2-2, 2-3 is displayed.
- [0.05]V0 displayed from GAP= GTAW, PAW is the setting range from 0.05 ~ 2.55V.
- PACT setting range is from 0.5-22.5V.
- How to adjust the set value and do the memory is the same as remarked above: push on the Rotary Encoder (PUSH MEMORY TURN DATA ADJ), the cursor will come in and then rotate the nob of the Encoder to the right or left until the target value appears. If you find the setting value, push the Rotary Encoder for memory or saving. The cursor will disappear and the new value is memorized.

* HOW TO USE the MEMORY function

```
[ G T A W ]      M E M : 0
A V =   9 . 0 0 G A P = 0 . 1 0
```

1. If the operator changes from MEMORY 0 to Screen 2 by using DATA SELECT(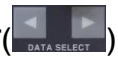

), the cursor in MEM 0 will show up, and then push on the PUSH MEMORY/TURN ADJ(

) for move to the cursor AV00 . Rotate the nob (PUSH MEMORY TURN DATA ADJ) for setting the welding standard voltage, and if the setting of standard voltage is finished, push on the Rotary Encoder. If so, the cursor moves to GAP0.05, rotate the nob of the Encoder to the right or left for setting of the Gap deviation value and then push on the Encoder for the saving. The MEMORY 0 data input is finished
2. MEMORY 0-9 : how to handle the MEMORY

   On the Screen 2, push the PUSH MEMORY/TURN DATA ADJ(

) and the cursor comes out: MEM 0 and then select one from MEMORY 1-4. The setting method is the same as that of welding voltage and deviation value.

   Whenever the operator pushes the PMTDA one time, the cursor comes automatically to next setting menu. The settings are the same as: rotate PMTDA and then push one time for saving of the data.

SCREEN 3. Welding Process Selection.

```
1 > G T A W   2 > P A W
3 > P A C T   T Y P E = [ 1 ]
```

- It is the screen to select welding process.
- The operator can select one of three and input the process :1> GTAW 2> PAW 3> PACT TYPE=[ ].
- The operator turns the Rotary Encoder for selection and then push one time for setting of the process.
- The cursor comes out when to finish the input by one push.

SCREEN 5. START GAP setting

```
S T A R T - G A P
L E N = [ 2 . 0 ] m m
```

- It is the screen to set the rising gap between the tungsten electrode and workpiece. After START GAP s/w is ON, the Slider moves down and the tungsten touches on the surface. The torch rises immediately after touch. This screen is to set how high to rise up from the surface.
- The setting range is from.0.-10.0mm, setting by the unit 0.1mm.
- Use the PMDTA(Rotary Encoder) to set the data and then push one time for saving of the setting. The cursor disappears after finishing the memory of the data.

SCREEN 6 START GAP speed timer

```
S T - G A P   D W N = [ 9 4 ] %
  S P E E D   U P   = [ 9 8 ] %
```

- It is the screen to set the speed of up/down of STOCK OUT.
- The fast down-speed makes the electrode tip damaged, so it is better not to set fast speed.
- When the speed is set by turning left or right, push one time the rotary encoder(PMTDA) for memory setting.
- The cursor comes out when to do set finishing.

SCREEN 7 START DELAY TIMER

```
S T A R T   D E L A Y
T I M E     = [ 0 . 3 ] S E C
```

- It is the Timer setting screen for dwell timing. In this screen the operator can set the sec which is take in moving the Slider after AUTO RUN s/w is ON.
- The dwell time shall be set longer than that of up slope time in GTAW process.
- It is to prevent the welding defects because if the Slider moves under the Arc is unstable, the welding defects may occur. There for the operator shall set the dwell

time according to the welding conditions.

- After setting the dwell time by turning the rotary encoder(PMTDA) left or right, push one time the button(rotary encoder) for memory setting.

SCREEN 8 ARC-VOLTAGE AVE SET TIMER

```
Arc-Average Time
  AveT  = [ 2.0 ] SEC
```

- The function does works on the conditions that 1)AVC is selected on screen 4.
- The Arc Voltage produced during the setting sec. is averaged and then automatically memorized as standard.
- The data can be adjusted by using the Rotary Encoder: rotate the nob of the Rotary to the right or left for setting of the sec. and then push on the Rotary Encoder for memory of the setting.
- The cursor does disappear after pushing the nob of the Rotary Encoder.

SCREEN 9 OUTPUT DELAY TIMER

```
  OUTPUT  DELAY
  TIME  = [ 0.0 ] SEC
```

- Check the Arc Voltage from AUTO RUN MODE and the present ARC Voltage
- The Slider does move up or down if the deviation range set on the screen 2 is over and the setting sec in the delay timer is over.
- But, the Slider does not work´s if above both conditions are not over.
- This function shall be used in consideration of the conditions of the work-piece, not to set in short or long.
- The data setting is same as that of other timer: rotating the nob of the Rotary Encoder for setting of the sec, to the right and left, and then push on the Encoder for memory of the data.
- The cursor does disappear when to finish the setting and memory.

SCREEN 10. AUTO UP/DOWN SPEED TIMER

```
AUTO-     DWN = [ 60 ] %
SPD  M:0  UP  = [ 61 ] %
```

- It is TIMER screen to set the speed of Slider up/down under the AUTO RUN ON.
- How to input the data is the same as explained above regarding the Rotary Encoder (PMTDA) Rotate the nob for setting value and then push on the Encoder for data memory. After memory and saving the data, the cursor comes out.

* How to handle the MEM Function.

```
A U T O -      D W N = [ 6 0 ] %
S P D   M : 0   U P = [ 6 9 ] %
```

1. With the DATA SELECT(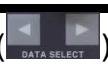) button, go to screen 10 and the cursor will appear and then turn the Rotary Encoder for adjusting. As above, the cursor in DWN will show up and then turn the Rotary to the sec the operator wants and then if the operator pushes on the button, the cursor will move to M:0. After setting the M:0 and the push on the Rotary Encoder button(PUSH MEMORY/TURN ADJ) , the cursor will go to UP[ ] and do the setting as that of other TIMER explained before.

2. How to handle the MEMORY 1 ~ 9

   On the screen 10, push on the Rotary Encode(PUSH MEMORY/TURN ADJ) and then the cursor comes MEM 0 Turn the Encoder and select one of MEMORY 0-9, input the data(or sec) as that of the TIMER setting explained before:. DWN or UP Whenever to push on the Encoder, the cursor will move to next setting point.
   As explained before, the data setting will be finished when to push on the Encoder

SCREEN 11. MAN UP, DOWN SPEED Timer

```
  M A N -      D W N = [ 9 8 ] %
  S P E E D      U P = [ 9 8 ] %
```

- It is the screen to input and set the data with manual.
- Turn the Encoder(PUSH MEMORY/TURN ADJ) to the sec the operator wants to adjust and then push on the Encoder button for the data memory: the cursor will come out after setting finish.

SCREEN 12. PULL-UP TRAVEL setting.

```
A : P U   L E N = [ 3 0 ] M M
M : L L   L E N = [ 3 0 ] M M
```

```
A : P U   L E N = [   0 ] M M
M : L L   L E N = [ 3 0 ] M M
```

- After the rising(or up) dwell time It is the screen to set the travel distance from workpiece to standby position after welding finish.
- The distance shall be set not to disturb the loading of workpiece or unloading.
- A:LEN=[30]MM
  If the length is set, AUTO(RUN) START S/W is off and the slider moves up till the settings and then stop, If you don´t want this function, set the length as A:LEN=[0]

- If the mode setting changes to M:LEN=[30], the AUTO(RUN) START S/W is off. And if 1 and 2 in the remote are on, the slider moves up to the height as much as set at the M:LEN=[30] and then stop.
- If the setting length is long, it will take long time for the torch to come down to the welding point in the workpiece.
- The distance input method is same as that of another TIMER

SCREEN 13. PULL-UP SPEED setting

```
      P U L L - U P
  S P D : 9 8 %   T = 2 . 0 S
```

- It is screen for Pull-up Speed and dwell time setting.
- SPD:98% means the setting on rising height and speed of Screen12.
- T=2.0S means the rising dwell time setting from A:[XX]mm in Screen12.
  After auto run start switch off, set the rising dwell time with A:[XX]mm after T=XXs
- The speed setting or change method is same as that of the TIMER setting-using the Encoder and then push on its button for memory.

SCREEN 14. SLIDE DOWN LIMIT SWITCH ON

```
  A R C 0   1 0 0 . 0 [ V / S ]
  D O W N - L S   E R R O R !
```

- If the down-Slider comes to the LIMIT SWITCH, the operating in the AUTO mode stops and the error message shows up on the screen: DOWN LS ERROR.

SCREEN 15 SLIDE TOP LIMIT SWITCH ON

```
  A R C 0   1 0 0 . 0 [ V / S ]
    T O P - L S   E R R O R !
```

- When the SLIDE moves up and then touch SLIDE LIMIT SWITCH ON, the slider moving up stops and show up the error message: TOP LS ERROR.

6.INSTALLATION

6-1 Sensor

1) Sensor type

- It is a sensor to be used to the constant current welder, detecting the variation of the arc voltage under the welding.

(1) GTAW,PAW welding process (DC)

- Type: HAD-01-QV-50
- Voltage detection rage : 5 – 50V

※ Note : the end-user should discuss the welding machine and the specification of the welder with Hangil.

(2)Plasma Cutting. (DC)

- Type: HAD-01-QV-500
- Voltage detection rage : 5 – 50V

※ Note : the end-user should discuss the welding machine and the specification of the welder with Hangil.

2) How to connect the sensor.

- The connection depends on the process.

(1) GTAW, PAW, PLASMA CUTTING(DC) (Separately attached for reference)

- GTAW, PAW, PLASMA CUTTING The blue cable(-) from the sensor is connected to the torch of the process and red cable(+) to work-piece.

※ Note: the green cable of the sensor is the earth, which shall be connected to the case of the welder.

Installation Drawing (A. H. C SYSTEM CONNECTION)

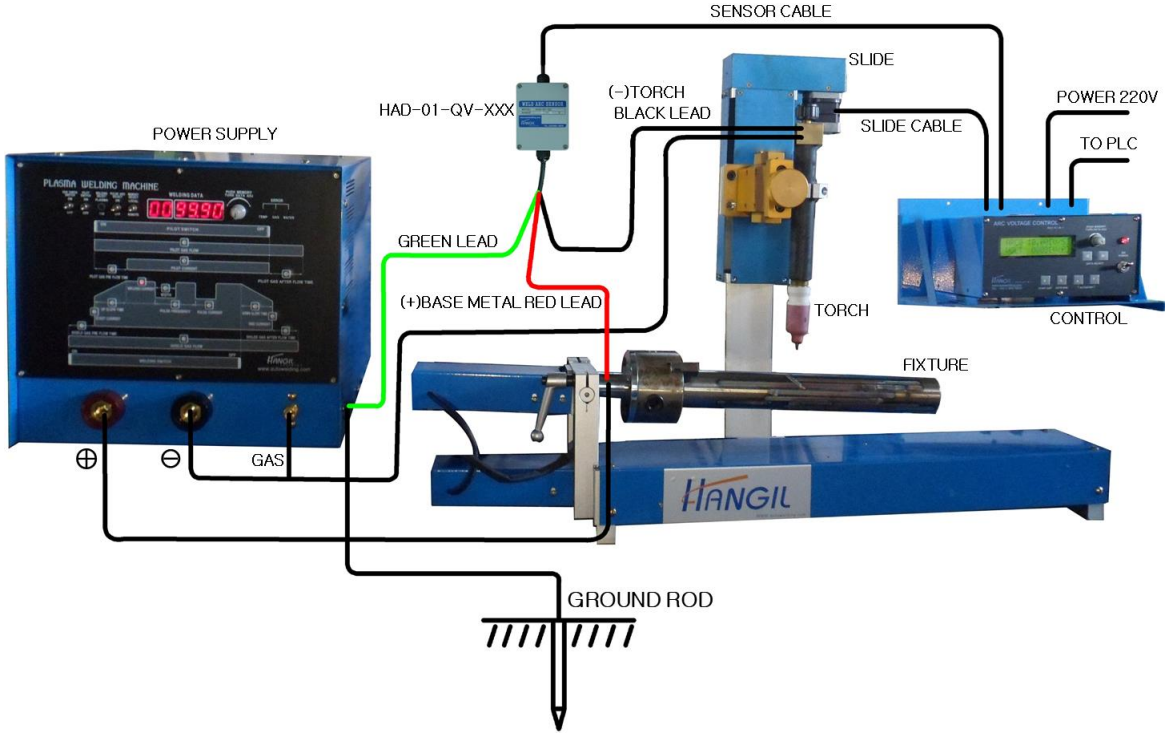

7. OPERATION

7-1. Operation preparation

- Understand the manual fully on how to connect, how to operate and refer to the wire connection. Make sure all connection is correct.

- How to operate -

1) The toggle switch is positioned at MANUAL.
2) Set the process and select the SENSOR type.
3) Set all the parameters according to the welding condition.
4) Set the distance between the torch and work-piece by moving the slide with the toggle switch.
5) Set the welding parameters by operating the welding machine.
6) After the setting is finished, the toggle switch positioned at the AUTO is automatically operated.
7) Working Chart; see it separately.

※ Explanation on Operation.

(1) Power S/W	- Power S/W is on and then the operator can select the operating mode with Data Select push button and in addition set the welding parameters.
(2) START GAP ON	- If START GAP S/W is on, the Slider mounted with the torch goes down and touch on the workpiece, moving up to the position (or height) set at STICK OUT. At the same time RELAY (1) is on and the Slider does stop. This AVC can be connected to other external equipment with the RELAY
(3) AUTO RUN ON	- When START(2) S/W is on in the mode, the AV Coperating parameters are automatically saved in the controller. If the S/W is On, the RELAY(2) is On. The RELAY(2) can be used for ON-OFF of the welder. The welding memory can be selected under AUTO RUNS/W ON and AUTO RUN MODE. The selected Memory does work on the AVC unit.
(4) START DELAY TIME	- It is the Timer to set the operating timing after AUTORUN S/W is on. This function makes ARC stable. The setting sec shall be longer than that of up slope TIMER of welding machine.
(5) AUTO ARC AVERGE MEMORY TIMER (The Timer can used then the AVC is selected in the screen)	- It is used when the AVE is set on the screen of ARC VOLTAGE SET. The TIMER does automatically memorize the Arc Voltage averaged during the setting sec

(6) OUT PUT DELAY TIMER	- During the AUTO RUN, even though the deviation range is exceeding, the Slider does not move up or down within the setting sec. But it moves up or down in case the exceeding voltage is produced longer than the setting sec.
(7) PULL-UP	- It is the function to automatically pull up the SLIDER to a proper height for unloading of the workpiece.

(8) If the welding current is changed during the welding, the controller does sense the change and then made the slider move up or down as per setting. (The standard voltage change also makes the slider move up or down). It is easier to adjust the standard voltage than the welding current.
(9) After finish the welding, push off the s/w of AUTO RUN.
(10) For the repeat welding of the same work-piece, use the START GAP AUTO RUN ON-OFF.
(11) The welding memory can be selected when AUTO RUN is ON during AUTO RUN mode. The AVC does work as per the selected memory.
(12) The parameters shall be changed according to the welding conditions
(13) Power is off after finish the welding.

WORKING CHART

1) START(I) OR START(II) APPLICATION

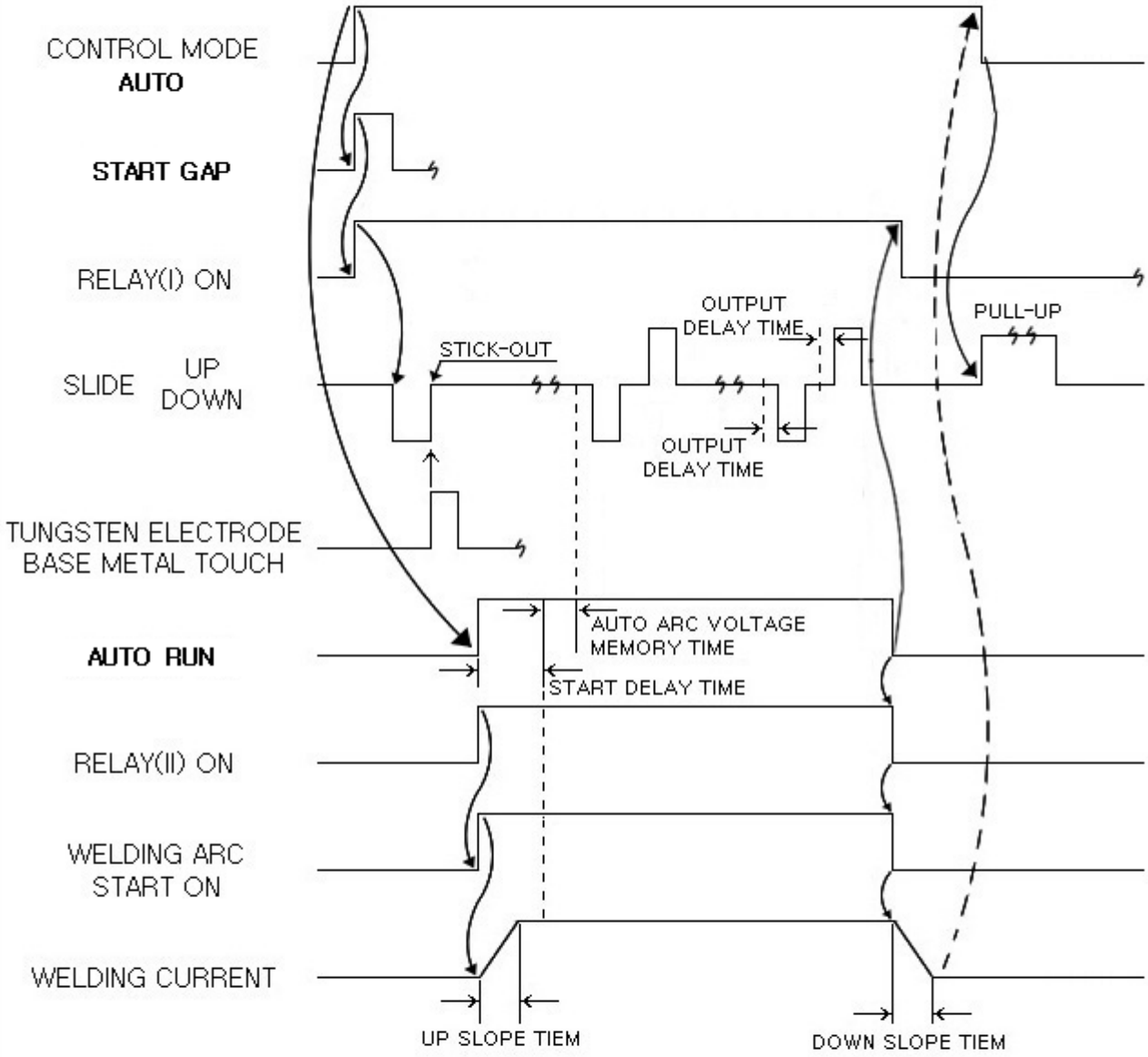

*NOTE

1) The start delay time shall be set larger the time of GTAW welder upslope.
2) The auto arc voltage memory timer can be used when the arc voltage auto [1] auto is elected on screen

WORKING CHART

2) START(II) ONLY APPLICATION

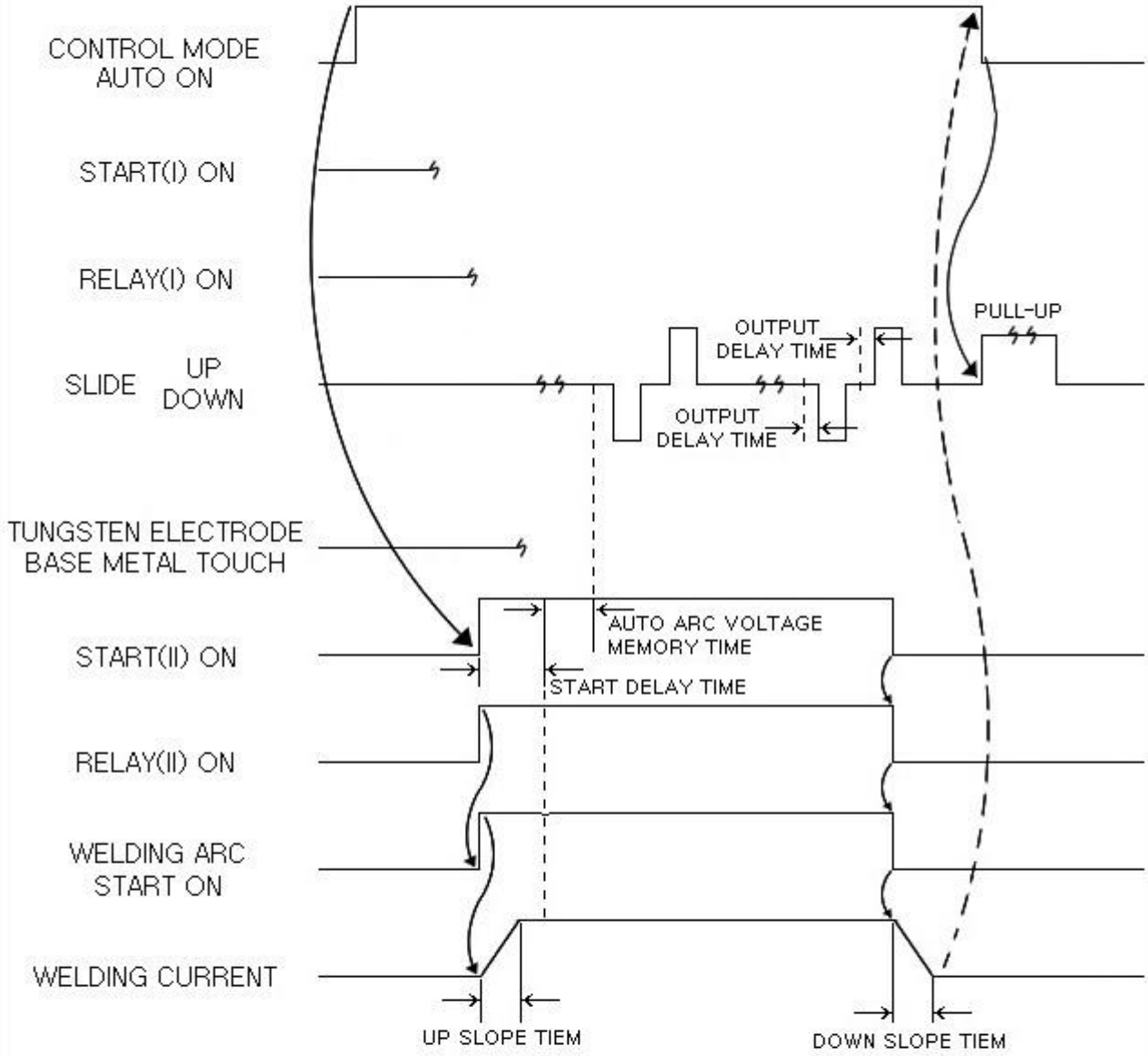

*NOTE

1) The start delay time shall be set larger the time of GTAW welder upslope.
2) The auto arc voltage memory timer can be used when the arc voltage auto [1] auto is elected on screen

7-2. Cautions on operation

1) Pick up the sensor according to the welding conditions(AVC). If the sensor does not meet with the welding process, there is likely to have a wrong control. If the sensor does not meet with the function selection, the slides may move in other direction, not to control.
2) The slide shall be positioned at the Center at initial installation. If it is lopsided to the other when it is installed, the control may be limited and the limit switch can work from a side. That causes a defect welding.
3) Let us check the pick-up of the WELDER brand for GTAW process.
   Some type does not apply to AVC.
4) Hangil can guarantee the AVC is operated under a good control when all the pre-conditions are acceptable.
5) If the operator wants to adjust the distance of the torch during the welding, make the standard voltage adjustor changed.

★ CAUTION ★

1) Amount the Sensor cable, Connect the green color to welding machine case. Otherwise it causes the breakdown.
   AUTO RUN
2) Take caution not to have wrong cable connection for torch and work-piece.
   The wrong cable connection causes the breakdown of the Sensor or trouble in operation.

Installation Drawing (A. H. C SYSTEM CONNECTION)

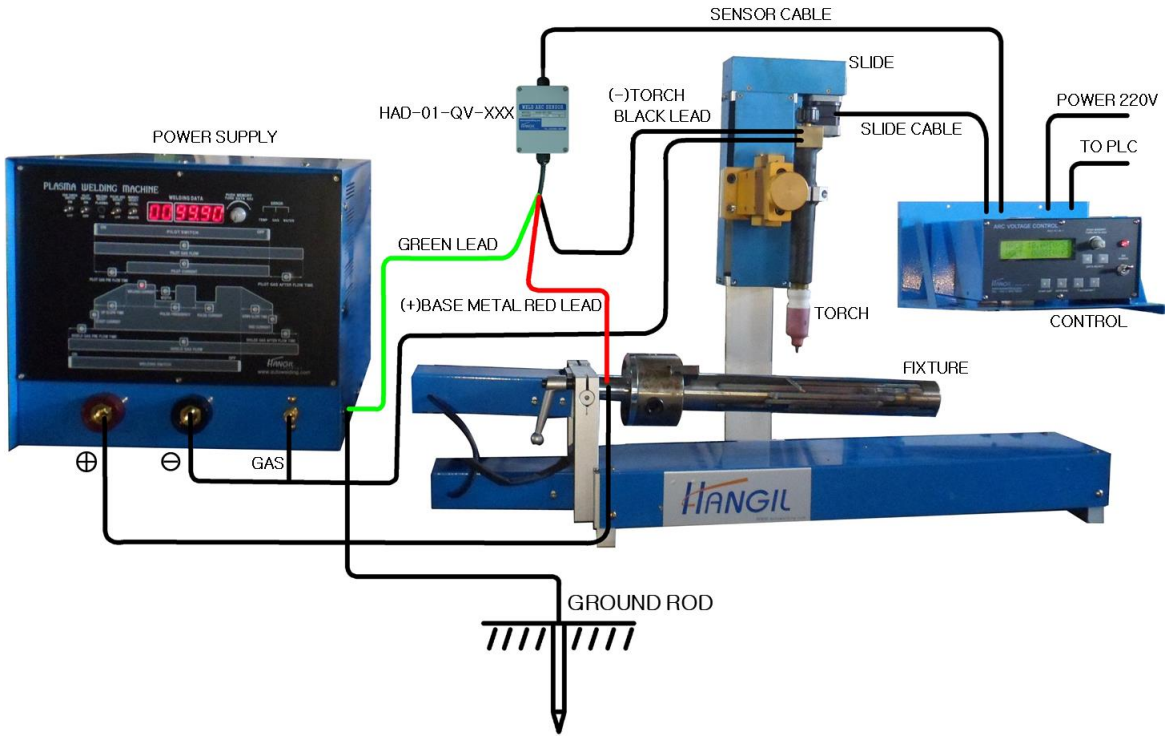

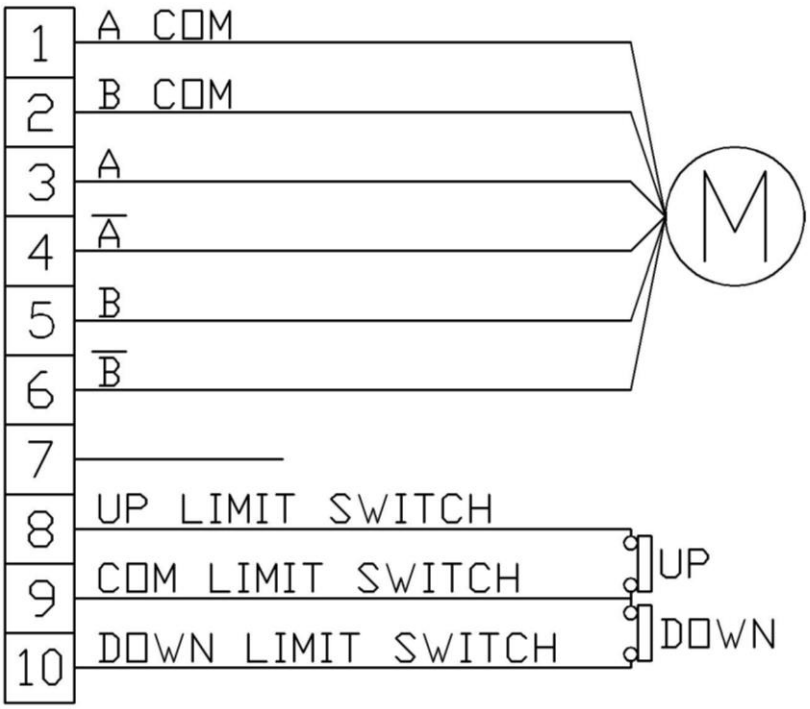

⚠1								
⚠2								
訂符	年月日	記 事	製圖	品番	品 名	材 質	數量	備 考
作成日字 年 月 日			圖名 CON2 UP, DOWN SLIDE CONNECTOR					
檢圖	設計	製圖	한길산업		圖番			
					尺度 1/		枚數 /	

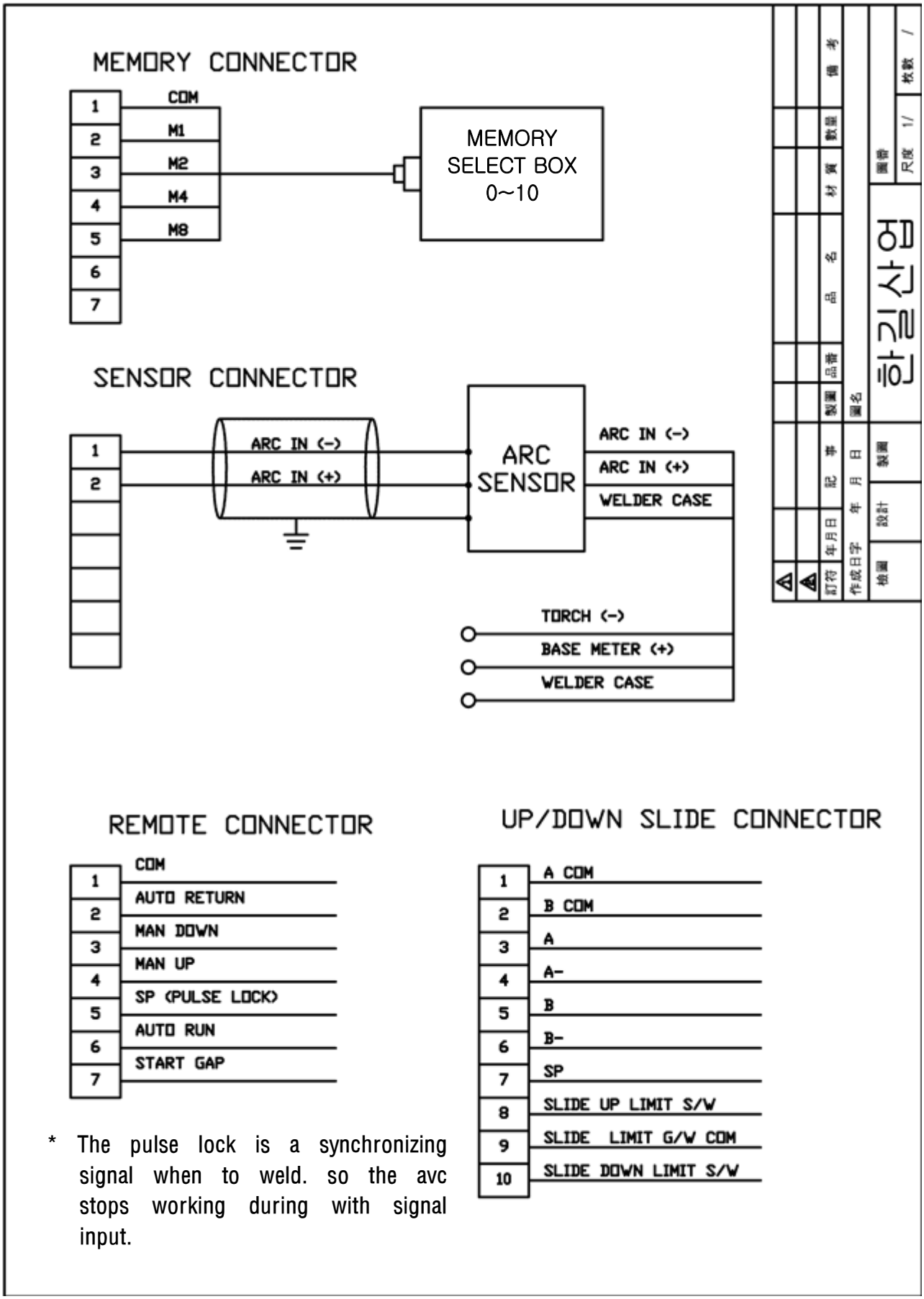

* The pulse lock is a synchronizing signal when to weld. so the avc stops working during with signal input.

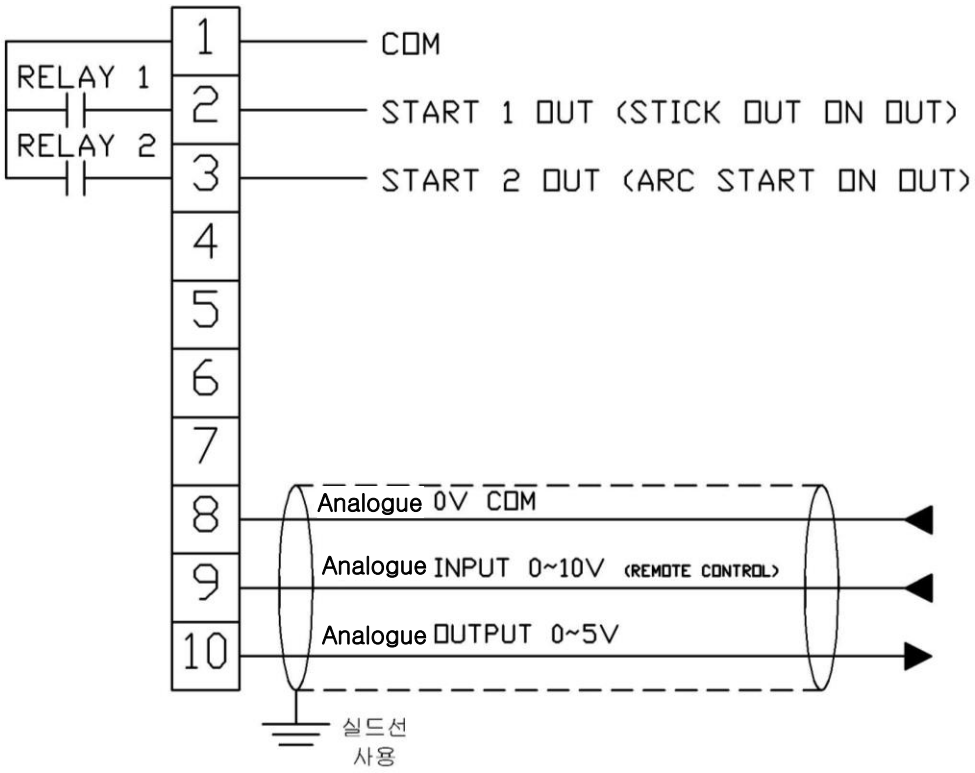

1) The welding voltage is set 50V when Analogue 0~10V is input as 10V
2) The welding voltage is set 50V when Analogue 0~10V is input as 5V
3) The welding voltage is 50V when 0~10V output as 10V

①								
②								
訂符	年月日	記 事	製圖	品番	品 名	材 質	數量	備 考
作成日字 年 月 日			圖名 CON4 M/C OUT CONNECTOR (아날로그 타입)					
檢圖	設計	製圖	한길산업			圖番		
						尺度 1/	枚數 /	

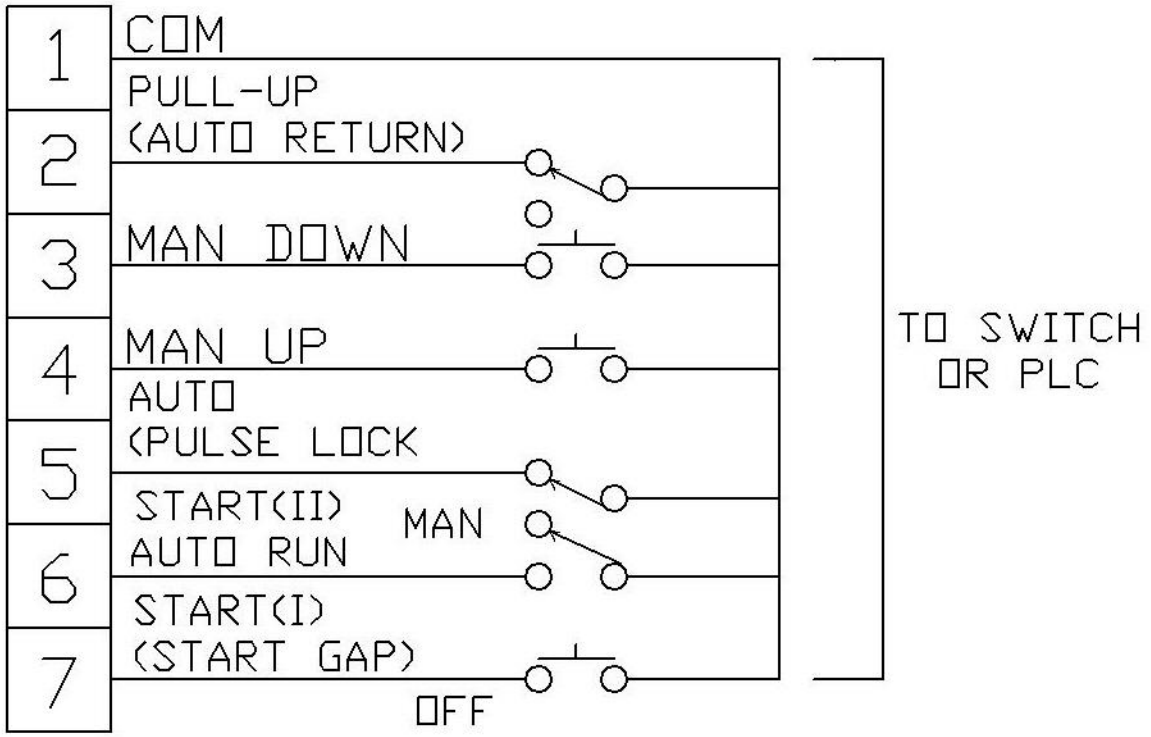

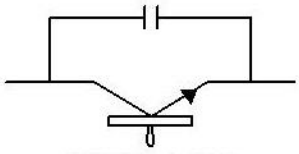

PULSE LOCK

⚠1								
⚠2								
訂符	年月日	記 事	製圖	品番	品 名	材 質	數量	備 考
作成日字 年 月 日			圖名 CON5 REMOTE CONTROL CONNECTOR					
檢圖	設計	製圖	한길산업			圖番		
						尺度 1/	枚數 /	

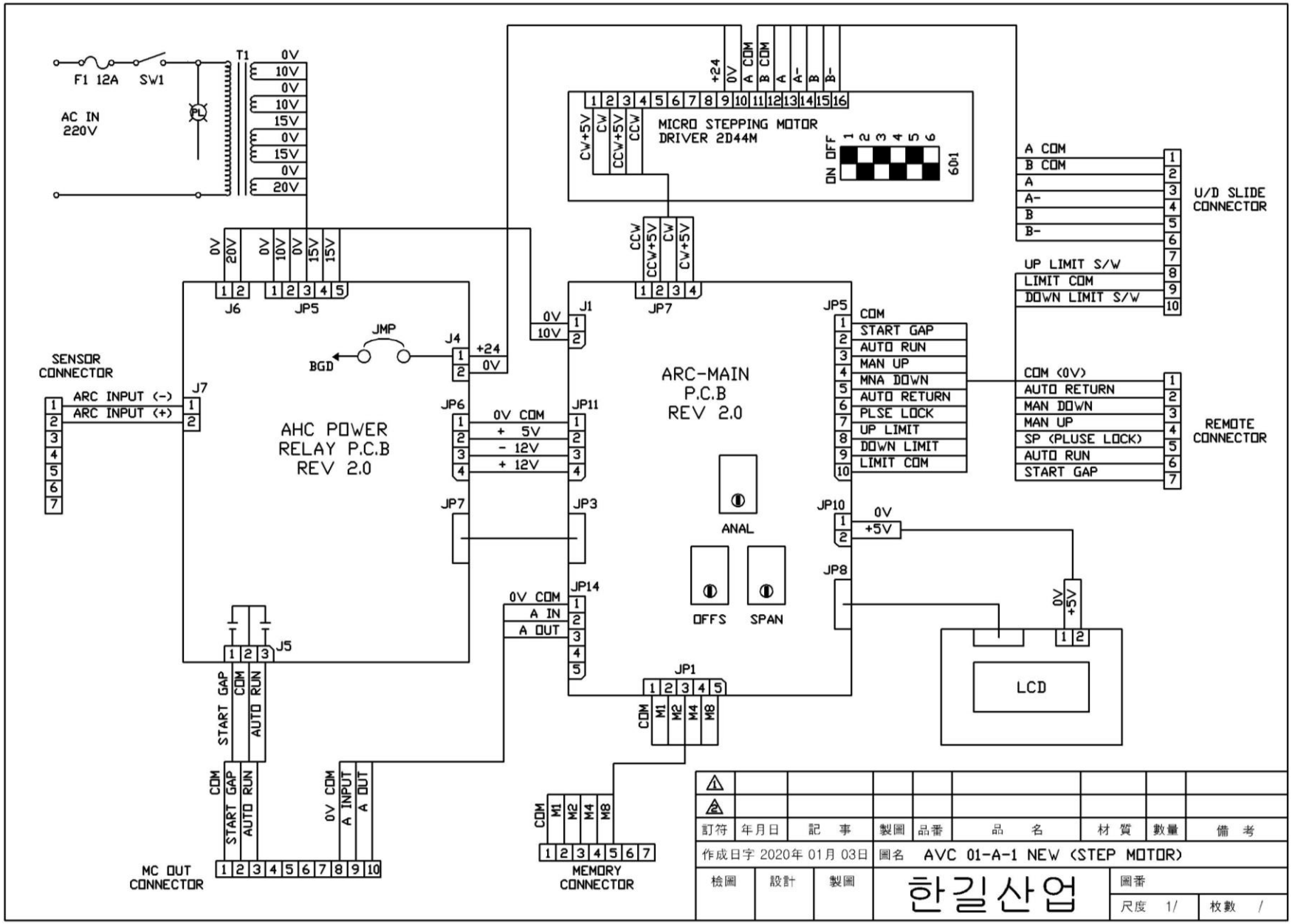
F1 12A
SW1
AC IN
220V
T1
0V
10V
0V
10V
15V
0V
15V
0V
20V
MICRO STEPPING MOTOR
DRIVER 2D44M
ON OFF
A COM
B COM
A
A-
B
B-
U/D SLIDE
CONNECTOR
UP LIMIT S/W
LIMIT COM
DOWN LIMIT S/W
SENSOR
CONNECTOR
ARC INPUT (-)
ARC INPUT (+)
AHC POWER
RELAY P.C.B
REV 2.0
JMP
BGD
ARC-MAIN
P.C.B
REV 2.0
COM
START GAP
AUTO RUN
MAN UP
MNA DOWN
AUTO RETURN
PLSE LOCK
UP LIMIT
DOWN LIMIT
LIMIT COM
COM (0V)
AUTO RETURN
MAN DOWN
MAN UP
SP (PLUSE LOCK)
AUTO RUN
START GAP
REMOTE
CONNECTOR
0V COM
+ 5V
- 12V
+ 12V
ANAL
OFFS
SPAN
0V COM
A IN
A OUT
0V
+5V
LCD
COM
M1
M2
M4
M8
MC OUT
CONNECTOR
MEMORY
CONNECTOR
訂符
年月日
記 事
製圖
品番
品 名
材 質
數量
備 考
作成日字 2020年 01月 03日
圖名 AVC 01-A-1 NEW (STEP MOTOR)
檢圖
設計
製圖
한길산업
圖番
尺度 1/
枚數 /

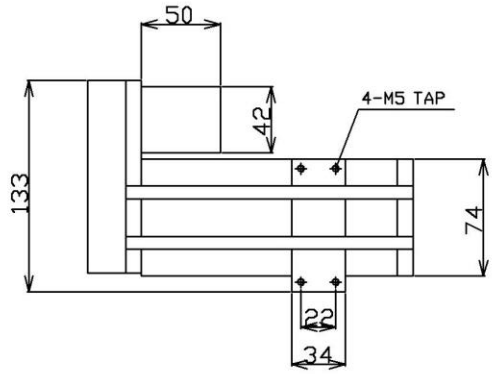

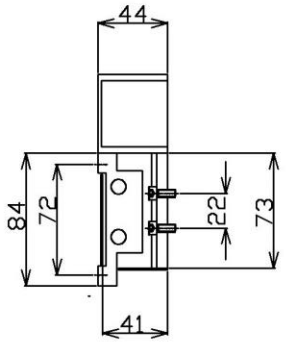

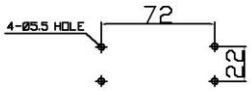

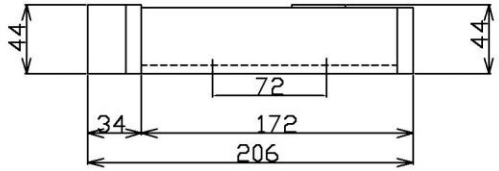

FOR	HS-01-100(STROKE 100mm)		
TITLE			
SCALE	DRAWER	CHECKED BY	
	DESIGNER	APPROVED BY	
DATE	JOB NO.	DWG. NO.	REV. 1

한길산업

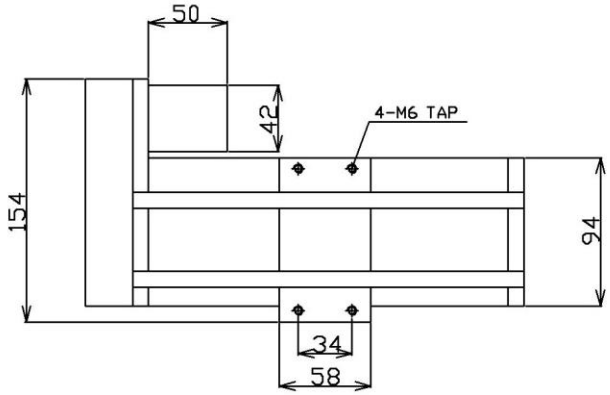

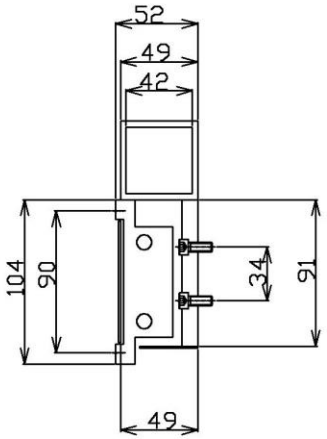

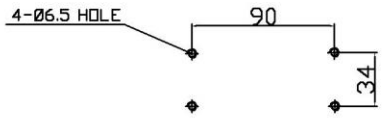

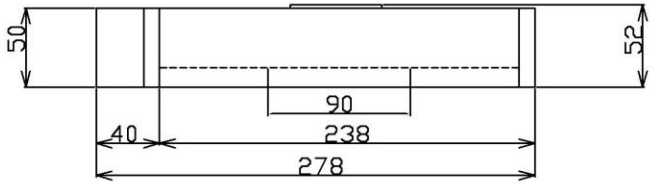

FOR HS-02-140(STROKE 140mm)			
TITLE			
SCALE	DRAWER	CHECKED BY	
	DESIGNER	APPROVED BY	
DATE	JOB NO.	DWG. NO.	REV. 1

한길산업

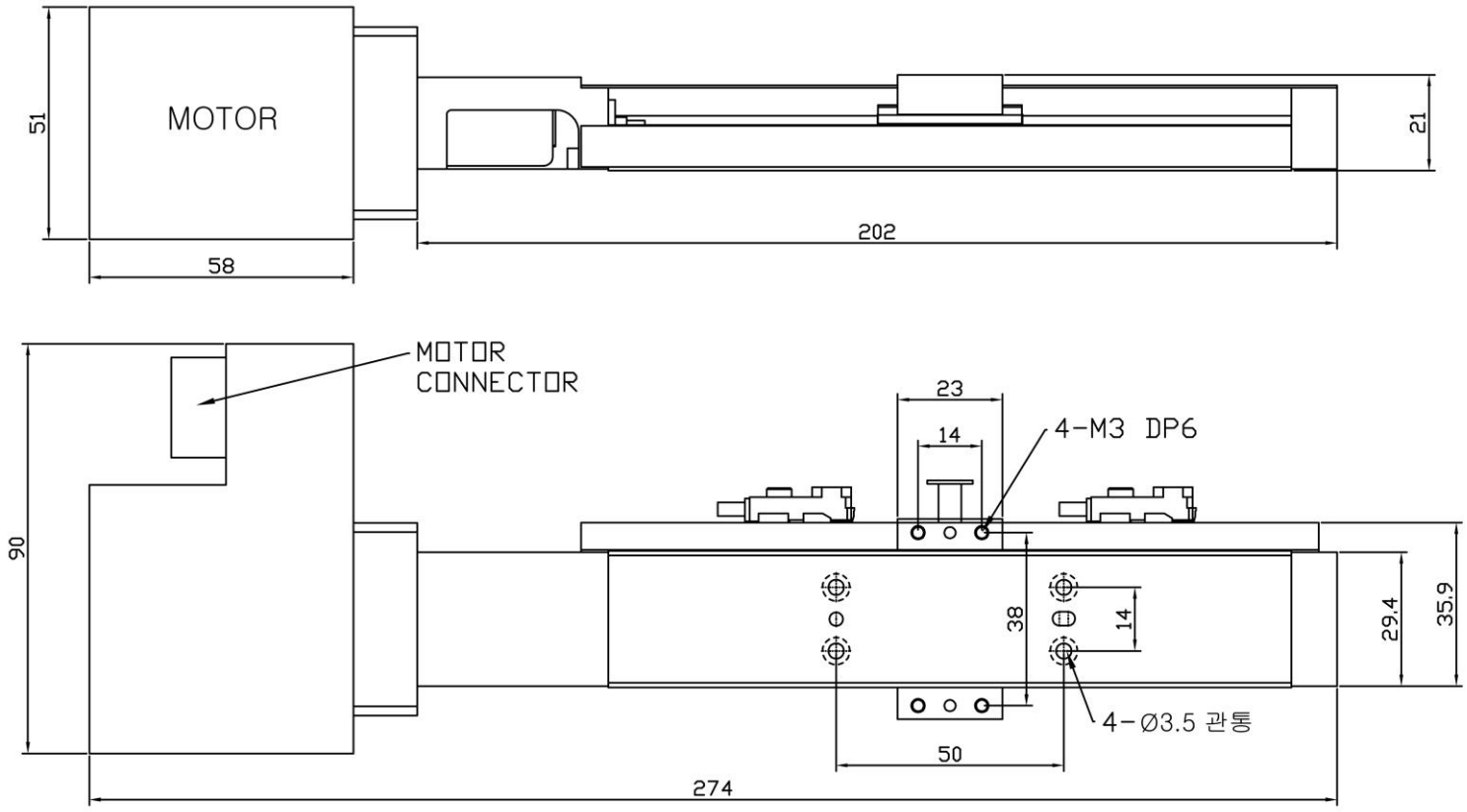

⚠1								
⚠2								
訂符	年月日	記 事	製圖	品番	品 名	材 質	數量	備 考
作成日字 年 月 日			圖名 SLIDE STROKE 100mm (HS-15-100)					
檢圖	設計	製圖	한길산업			圖番		
						尺度 1/	枚數 /	

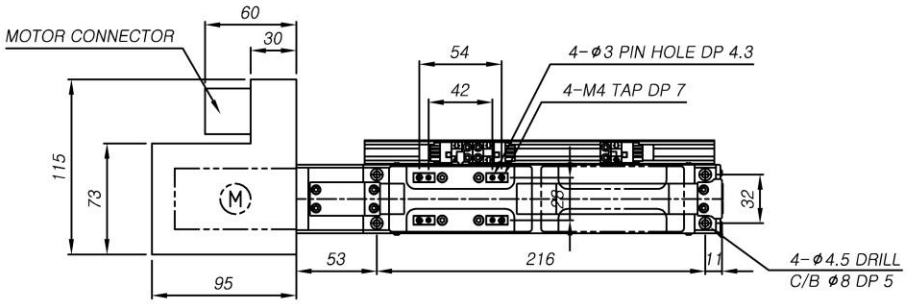

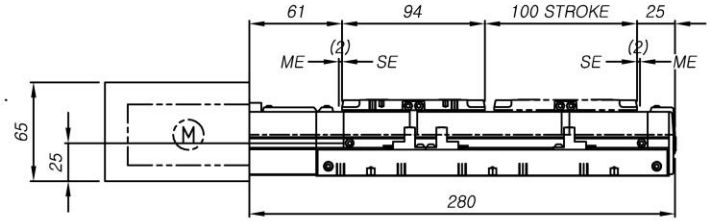

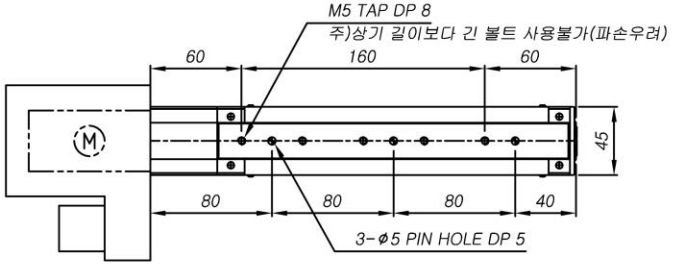

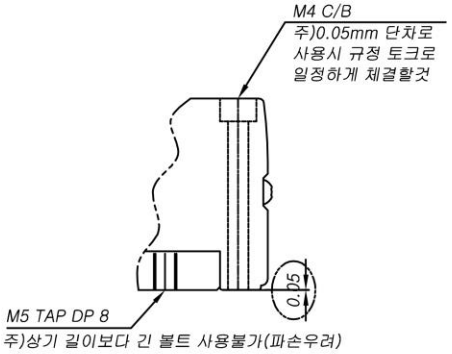

BASE Detail

년 월 일	기 호	변경 내용	소 속	성 명	확 인	수 량	비 고		
작성일자 년 월 일			품명 SLIDE STROCK 100mm (HS-45-100)						
작성	검토	승인	한길산업			품번			
						척도 1/1	재질		

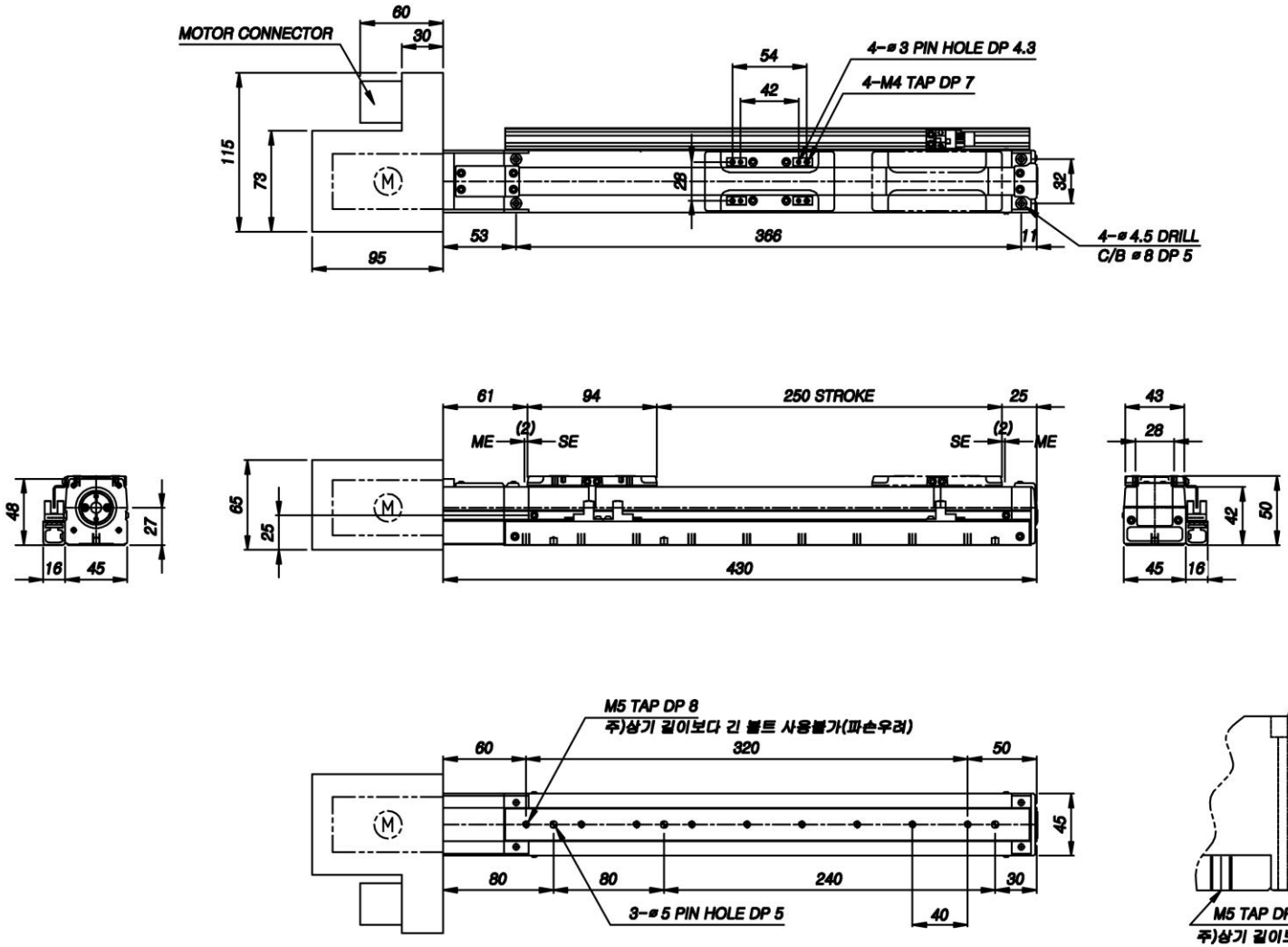
MOTOR CONNECTOR
60
30
54
42
4-ø3 PIN HOLE DP 4.3
4-M4 TAP DP 7
115
73
28
32
53
366
11
95
4-ø4.5 DRILL
C/B ø8 DP 5
61
94
250 STROKE
25
43
(2)
ME
SE
SE
(2)
ME
28
48
27
65
25
42
50
16
45
430
45
16
M4 C/B
주)0.05mm 단차로
사용시 규정 토크로
일정하게 체결할것
M5 TAP DP 8
주)상기 길이보다 긴 볼트 사용불가(파손우려)
60
320
50
45
80
80
240
30
40
3-ø5 PIN HOLE DP 5
0.05
M5 TAP DP 8
주)상기 길이보다 긴 볼트 사용불가(파손우려)
BASE Detail
한길산업

HANGIL INDUSTRY

575-20, Gwangmyeong 7-dong, Gwangmyeong-si, Gyeonggi-do, Korea

T E L : 82-2-895-9825

F A X : 82-2-894-6771

H - Page : www.autowelding.com

E -Mail : autowelding @autowelding.com